Test Report issued under the responsibility of:

TÜVRheinland®

TEST REPORT
IEC 61010-1
Safety requirements for electrical equipment for measurement, control, and laboratory use
Part 1: General requirements

Report Number. .....:	21164989_003
Date of issue .....:	2012-04-10
Total number of pages.....	74
Applicant's name.....:	John El. Geräte
Address .....:	Hauptstr. 87a, 09387 Jahnsdorf
Test specification:	
Standard .....:	IEC 61010-1 (Third Edition) :2010
Test procedure.....:	Test Report
Non-standard test method……..:	N/A
Test Report Form No.....:	IEC61010_1F
Test Report Form(s) Originator.....:	VDE Testing and Certification Institute
Master TRF .....:	2011-03

Copyright © 2011 Worldwide System for Conformity Testing and Certification of Electrotechnical Equipment and Components (IECEE), Geneva, Switzerland. All rights reserved.

This publication may be reproduced in whole or in part for non-commercial purposes as long as the IECEE is acknowledged as copyright owner and source of the material. IECEE takes no responsibility for and will not assume liability for damages resulting from the reader's interpretation of the reproduced material due to its placement and context.

If this Test Report Form is used by non-IECEE members, the IECEE/IEC logo and the reference to the CB Scheme procedure shall be removed.

This report is not valid as a CB Test Report unless signed by an approved CB Testing Laboratory and appended to a CB Test Certificate issued by an NCB in accordance with IECEE 02.

Test item description .....:	Short circuit box with remote switch
Trade Mark .....:	VWL
Manufacturer.....:	John El. Geräte
Model/Type reference .....:	Model: FWS-112 (system name) Type : Kurzschlussbox PVKS 2.3 Fernschalter PVFS 2.3
Ratings .....:	Kurzschlussbox: Umax=800V DC Imax=10A Fernschalter: Umax=15V DC Imax0,1mA DC

Testing procedure and testing location:		
☒ **CB Testing Laboratory:**	TÜV Rheinland LGA Products GmbH	
Testing location/ address .....:	Am Grauen Stein 29, D – 51105 Köln	
☐ **Associated CB Laboratory:**		
Testing location/ address .....:		
Tested by (name + signature).....:	Marcus Müller (SV)	
Approved by (name + signature)...:	Josef Engels (SV)	
☐ **Testing procedure: TMP**		
Testing location/ address .....:		
Tested by (name + signature).....:		
Approved by (name + signature)...:		
☐ **Testing procedure: WMT**		
Testing location/ address .....:		
Tested by (name + signature).....:		
Witnessed by (name + signature) .:		
Approved by (name + signature)...:		
☐ **Testing procedure: SMT**		
Testing location/ address .....:		
Tested by (name + signature).....:		
Approved by (name + signature)...:		
Supervised by (name + signature) :		
☐ **Testing procedure: RMT**		
Testing location/ address .....:		
Tested by (name + signature).....:		
Approved by (name + signature)...:		
Supervised by (name + signature) :		

List of Attachments (including a total number of pages in each attachment - Table 1):

Document No.	Documents included / attached to this report (description)	Page Numbers
1	Photo documentation	11
2	Schematics	6

Summary of testing:

The Equipment Under Test (EUT) did PASS all performed tests.

Test Report History:

Ref. No.	Item

Tests performed (name of test and test clause):	**Testing location:**
All relevant tests are performed and Pass	TÜV Rheinland LGA Products GmbH Am Grauen Stein 29, D – 51105 Köln

Summary of compliance with National Differences

List of countries addressed:

☒ **The product fulfils the requirements of EN 61010-1:2010**

Copy of marking plate

Test item particulars:

Type of item ..... :	Short circuit box with a remote switch
Description of equipment function ..... :	See general information
Connection to MAINS supply ..... :	Permanent / ~~Detachable cord set~~ / ~~Non detachable cord set / None~~
Installation category ..... :	I
POLLUTION DEGREE ..... :	2
Protection class ..... :	IP65 Specified by the manufacturer
Environmental rating ..... :	Standard / ~~Extended (Specify):~~
Equipment mobility ..... :	~~Portable~~ ~~/ Hand-held / Floor standing /~~ Fixed ~~/ Built in~~
Operating conditions ..... :	Continuous / ~~Short-time / Intermittent~~
Overall size of equipment (W x D x H) ..... :	Kurzschlussbox PVKS 2.3= 146X245X55 mm Fernschalter PVFS 2.3= 160X80X55 mm
Mass of equipment (kg) ..... :	Kurzschlussbox PVKS 2.3= 1 Kg Fernschalter PVFS 2.3 = 0,310Kg
Marked degree of protection to IEC 60529 ..... :	Kurzschlussbox PVKS 2.3 = IP 65 Fernschalter PVFS 2.3= IP65 (manufacturer´s data)

Possible test case verdicts:

- Test case does not apply to the test object ..... :	N/A
- Test object does meet the requirement..... :	P (Pass)
- Test object does not meet the requirement ..... :	F (Fail)

Testing:

Date of receipt of test item ..... :	31.01.2012
Date (s) of performance of tests ..... :	31.01.2012- 30.03.2012

General remarks:

The test results presented in this report relate only to the object tested.
This report shall not be reproduced, except in full, without the written approval of the Issuing testing laboratory.
"(see ENCLOSURE #)" refers to additional information appended to the report.
"(see Form A.xx)" refers to a table appended to the report.

Throughout this report a ☒ comma / ☐ point is used as the decimal separator.

Manufacturer's Declaration per sub-clause 6.2.5 of IECEE 02:

The application for obtaining a CB Test Certificate includes more than one factory location and a declaration from the Manufacturer stating that the sample(s) submitted for evaluation is (are) representative of the products from each factory has been provided..... : ☐ Yes ☒ Not applicable

When differences exist; they shall be identified in the General product information section.

Name and address of factory (ies) ..... : John Elektronische Geräte
Hauptstr. 87a
09387 Jahnsdorf

General product information:

The test item (FWS-112) is a short circuit box with a remote switch.
The short circuit box can powered with max. 800VDC and it has a protection class I (metal enclosure).The remote switch can only be power by the short circuit box with 15VDC and it has a protection class III.

This test item (FWS-112) will be also used for switch a PV string out of voltage, but this is not part of this test report. Therefore the short circuit box with remote switch are only be tested according the standard IEC 61010-1 (Third Edition) :2010. The short circuit box with a remote switch was classified as an electrical equipment for measurement, control and laboratory use.

	TABLE: 1 - Test equipment list				P
Item	Type	Equipment No.	Calibration date		Comments
			Last[1]	Due	
1	Temperature Recorder	02687	07 / 10	07 / 12	--
2	Power Meter	00054	05 / 10	05 / 12	--
3	Multimeter (hand-held)	02721	03 / 11	03 / 13	--
4	HV – Tester	02308	07 / 11	08 / 12	--
5	Touch Current Tester (filter)	02145	09 / 10	09 / 13	--
6	Oscilloscope	03634	--	05 / 13	--
7	Earth Continuity Tester	01378	03 / 10	03 / 12	--
8	Calliper	01378	--	03 / 12	150 mm
9	Test Probe A	00131	01 / 11	01 / 13	Joint
10	Test Probe B	01902	02 / 11	02 / 13	3mm
11	Test Probe C	00486	12 / 07	12 / 12	12mm x 80mm
12	Test Probe	01956	03 / 11	03 / 13	1mm x 100mm
13	Test Probe	02179	07 / 11	08 / 14	2.5mm x 100mm
14	Test Probe	02182	10 / 11	11 / 14	4mm x 50mm
15	Stop Watch	01942	03 / 11	03 / 13	auto
16	Test Ball	00636	11 / 07	11 / 12	50mm
17	Pressure Dynamometer	01877	12 / 10	12 / 12	500N
18	Torque Wrench	00796	10 / 14	10 / 12	100Ncm
19	HV – Tester	02689	11 / 11	11 / 12	--

1) or interval between calibrations.

IEC 61010-1						
Clause	Requirement — Test		Result — Remark			Verdict
	TABLE: 3 - List of components and circuits relied on for safety					P
Unique component reference or location	Application/function	Manufacturer / trademark (NOTE 1)	Type / model	Technical data (NOTE 2)	Standard	Mark(s) of conformity evidence of acceptance (NOTE 3 and 4)
Transistor	T10,	ST	BUV 48A	VCER= 100V	--	--
Capacitor	C9	EPCOS	B32651..	110℃	--	--
Terminal	KL1, KL2	WECO	159	100V, max. 76A	UL 94 / UL 1059	UL, CSA
PCB	--	--	--	94-V0	UL 94	UL, CSA
Optocoupler	LED1/ T1, LED2/ T5, LED3 / T13	VISHAY	CNY 66	1000V	DIN EN 60747-5-5 UL 1577	UL (E76222) ; CSA ; VDE
Varistor	VDR1	Epcos	S10 k680	680V,	UL 1414 CSA 22.2	UL, CSA
Varistor	VDR2, VDR3	Epcos	07 K395	395V	UL 1414 CSA 22.2	UL, CSA
Diode	D1	VISHAY	40 EPS	VRRM= 1200V; IF= 40A	--	--
Cord crip	--	EUROFIX	M….	IP68, 100℃	DIN EN 50262	VDE, UL, CSA

Note → 1 List all different manufacturers of the above components
→ 2 May include electrical, mechanical values
→ 3 List licence no or method of acceptance
4 → asterisk indicates mark assuring agreed level of surveillance

IEC 61010-1			
Clause	Requirement + Test	Result - Remark	Verdict

4.4	Testing in SINGLE FAULT CONDITIONS		P
4.4.1	Fault tests	(see Form A.1 and A.2)	P
4.4.2	Application of SINGLE FAULT CONDITIONS		P
4.4.2.1	SINGLE FAULT CONDITIONS not covered by 4.4.2.1 to 4.4.2.14	(see Form A.1 and A.2)	—
4.4.2.2	PROTECTIVE IMPEDANCE		N/A
4.4.2.3	PROTECTIVE CONDUCTOR		N/A
4.4.2.4	Equipment or parts for short-term or intermittent operation		N/A
4.4.2.5	Motors	No motors available	N/A
4.4.2.6	Capacitors		P
4.4.2.7	MAINS transformers	No mains transformer. available	N/A
4.4.2.7.2	Short circuit		N/A
4.4.2.7.3	Overload		N/A
4.4.2.8	Outputs	No	N/A
4.4.2.9	Equipment for more than one supply		N/A
4.4.2.10	Cooling		N/A
4.4.2.11	Heating devices		N/A
4.4.2.12	Insulation between circuits and parts		N/A
4.4.2.13	Interlocks	No interlocks available.	N/A
4.4.2.14	Voltage selectors		N/A
4.4.3	Duration of tests	(see Form A.1 and A.2)	P
4.4.4	Conformity after application of fault conditions	(see Form A.1; A.2; A.8, A.14)	N/A

5	MARKING AND DOCUMENTATION		P
5.1.1	General		P
	Required equipment markings are:		—
	visible:		P
	From the exterior; or		P
	After removing a cover; or		N/A
	Opening a door		N/A
	After removal from a rack or panel		N/A
	Not put on parts which can be removed by an operator		P
	Letter symbols (IEC 60027) used		P

IEC 61010-1			
Clause	Requirement + Test	Result - Remark	Verdict
	Graphic symbols (IEC 61010-1: Table 1) used		P
5.1.2	Identification		—
	Equipment is identified by:		P
	a) Manufacturer's or supplier's name or trademark	John El. Geräte	P
	b) Model number, name or other means	Kurzschlussbox PVKS 2.3 Fernschalter PVFS 2.3	P
	Manufacturing location identified		N/A
5.1.3	MAINS supply		P
	Equipment is marked as follows:		P
	a) Nature of supply:		—
	1) a.c. RATED MAINS frequency or range of frequencies ..... :	Only DC	N/A
	2) d.c. with symbol 1		P
	b) RATED supply voltage(s) or range ..... :	Kurzschlussbox = Umax 800VDC Fernschalter = Umax 15VDC	P
	c) Max. RATED power (W or VA) or input current.... :	Kurzschlussbox = Imax 10ADC Fernschalter = Imax 0,1mADC	P
	The marked value not less than 90 % of the maximum value	(see Form A.3)	N/A
	If more than one voltage range:		—
	Separate values marked; or		N/A
	Values differ by less than 20 %	(see Form A.3)	N/A
	d) OPERATOR-set for different RATED supply voltages:	Only one Voltage in use	—
	Indicates the equipment set voltage		N/A
	Portable equipment indication is visible from the exterior		N/A
	Changing the setting changes the indication		N/A
	e) Accessory MAINS socket-outlets accepting standard MAINS plugs are marked:	No Mains socket-outlets	N/A
	With the voltage if it is different from the MAINS supply voltage ..... :		N/A
	For use only with specific equipment		N/A
	If not marked for specific equipment it is marked with:		N/A
	The maximum rated current or power; or		N/A
	Symbol 14 with full details in the documentation		N/A

IEC 61010-1			
Clause	Requirement + Test	Result - Remark	Verdict
5.1.4	Fuses	No Fuses in use	N/A
	Operator replaceable fuse marking (see also 5.4.5) .....:		N/A
5.1.5	TERMINALS, connections and operating devices	Approved terminals used.	P
5.1.5.1	General		P
	Where necessary for safety, indication of purpose of TERMINALS, connectors, controls and indicators marked		P
	If insufficient space, symbol 14 used		N/A
	Push-buttons and actuators of emergency stop devices and indicators:		—
	used only to indicate a warning of danger or		N/A
	the need for urgent action		P
	coloured red		P
	coded as specified in IEC 60073		P
	Supplementary means of coding provided, if meaning of colour relates (see IEC 60073):		N/A
	to safety of persons; or		N/A
	safety of the environment		P
5.1.5.2	TERMINALS	Approved Terminal used.	P
	MAINS supply TERMINAL identified		P
	Other TERMINAL marking:		P
	a) FUNCTIONAL EARTH TERMINALS (symbol 5 used)		N/A
	b) PROTECTIVE CONDUCTOR TERMINALS:	Terminal outsidw of the enclosure.	P
	Symbol 6 is placed close to or on the TERMINAL; or	Symbol 6 used.	P
	Part of appliance inlet		N/A
	c) TERMINALS of control circuits (symbol 7 used)		N/A
	d) HAZARDOUS LIVE TERMINALS supplied from the interior	No hazardous live outputs terminals.	N/A
	Standard MAINS socket outlet; or		N/A
	RATINGS marked; or		N/A
	Symbol 14 used		N/A
5.1.6	Switches and circuit breakers	No circuit breakers available.	N/A
	If disconnecting device, off position clearly marked		N/A
	If push-button used as power supply switch:		N/A
	Symbol 9 and 15 used for on-position		N/A

IEC 61010-1			
Clause	Requirement + Test	Result - Remark	Verdict
	Symbol 10 and 16 used for off-position		N/A
	Pair of symbols 9, 15 and 10, 16 close together		N/A
5.1.7	Equipment protected by DOUBLE INSULATION or REINFORCED INSULATION	Equipment is not protected by double insulation	N/A
	Protected throughout (symbol 11 used)		N/A
	Only partially protected (symbol 11 not used)		N/A
5.1.8	Field-wiring TERMINAL boxes	The normal operation is by the temperature rating -20℃ ….+ 40℃	N/A
	If TERMINAL or ENCLOSURE exceeds 60 °C:	(see Form A.21A)	N/A
	Cable temperature RATING marked .....:		N/A
	Marking visible before and during connection or beside TERMINAL		N/A
5.2	Warning markings		P
	Visible when ready for NORMAL USE		N/A
	Are near or on applicable parts	On the device.	P
	Symbols and text correct dimensions and colour:	On the short circuit box Symbol 14 used.	—
	a) symbols min 2,75 mm and text 1,5 mm high and contrasting in colour with background	Symbol and text used.	P
	b) symbols and text moulded, stamped or engraved in material min. 2,0 mm high and		N/A
	0.5 mm depth or raised if not contrasting in colour		N/A
	If necessary marked with symbol 14	See above	P
	Statement to isolate or disconnect if access by using a tool to HAZARDOUS LIVE parts is permitted	Statement in the instruction.	P
5.3	Durability of markings		P
	The required markings remain clear and legible in NORMAL USE	(see Form A.4)	P
5.4	Documentation		P
5.4.1	General		P
	Equipment is accompanied by documentation for safety purposes for OPERATOR or RESPONSIBLE BODY		P
	Safety documentation for service personnel authorized by the manufacturer		P
	Documentation necessary for safe operation is provided in printed media or	The “Operating Instructions“ in German	P
	in electronic media if available at any time		N/A
	Documentation includes:		—

IEC 61010-1			
Clause	Requirement + Test	Result - Remark	Verdict
	a) intended use		P
	b) technical specification		P
	c) name and address of manufacturer or supplier		P
	d) Information specified in 5.4.2 to 5.4.6		P
	e) information to mitigate residual RISK (see also subclause 17)		P
	f) accessories for safe operation of the equipment specified		N/A
	g) guidance provided to check correct function of the equipment, if incorrect reading may cause a HAZARD from harmful or corrosive substances of HAZARDOUS live parts		N/A
	h) instructions for lifting and carrying		N/A
	Warning statements and a clear explanation of warning symbols:		—
	Provided in the documentation; or		P
	Information is marked on the equipment		N/A
5.4.2	Equipment ratings		P
	Documentation includes:		—
	a) Supply voltage or voltage range ..... :	Kurzschlussbox = Umax 800VDC Fernschalter = Umax 15VDC	P
	Frequency or frequency range.....:	Only DC voltage	N/A
	Power or current rating .....:	Kurzschlussbox = Imax 10ADC Fernschalter = Imax 0,1mADC	P
	b) Description of all input and output connections in accordance to 6.6.1 a)		N/A
	c) RATING of insulation of external circuits in accordance to 6.6.1 b)		N/A
	d) Statement of the range of environmental conditions (see 1.4)		P
	e) Degree of protection (IEC 60529)		P
	f) if impact rating less than 5 J:	No Information about a lower level	N/A
	IK code in accordance to IEC 62262 marked or		N/A
	symbol 14 of table 1 marked, with		N/A
	RATED energy level and test method stated		N/A
5.4.3	Equipment installation		P
	Documentation includes instructions for:		P

IEC 61010-1			
Clause	Requirement + Test	Result - Remark	Verdict
	a) assembly, location and mounting requirements	See user manual	P
	b) protective earthing	See above	P
	c) connections to supply	See above	P
	d) permanently connected equipment:	See above	P
	1) Supply wiring requirements		P
	2) If external switch or circuit-breaker, requirements and location recommendation		N/A
	e) ventilation requirements	No special information given.	N/A
	f) special services (e. g. air, cooling liquid)		N/A
	g) Instructions relating to sound level	No sound emission	N/A
5.4.4	Equipment operation		P
	Instructions for use include:		P
	a) identification and description of operating controls		P
	b) positioning for disconnection		N/A
	c) instructions for interconnection		N/A
	d) specification of intermittent operation limits		N/A
	e) explanation of symbols used		P
	f) replacement of consumable materials	No consumable materials	N/A
	g) cleaning and decontamination		P
	h) Listing of any poisonous or injurious gases and quantities	The equipment itself does not contain poisonous or injurious chemicals that can be liberated from the equipment in dangerous quantities. The liberation of poisonous or injures gases caused by the evacuation process from the external evacuated reservoir is not the responsibility of the manufacturer.	N/A
	i) RISK reduction procedures relating to flammable liquids (see 9.5)	No flammable liquids in use	N/A
	j) RISK reduction procedures relating burn from surfaces permitted to exceed limits of 10.1		P
	Additional precautions for IEC 60950 conforming equipment in regard to moistures and liquids		N/A
	A statement about protection impairment if used in a manner not specified by the manufacturer		P
5.4.5	Equipment maintenance		P

IEC 61010-1			
Clause	Requirement + Test	Result - Remark	Verdict
	Instructions for RESPONSIBLE BODY include:		—
	Instructions sufficient in detail permitting safe maintenance and inspection and continued safety:		P
	Instruction against the use of detachable MAINS supply cord with inadequate rating	Permanent connected equipment	N/A
	Specific battery type of user replaceable batteries	No battery available.	N/A
	Any manufacturer specified parts		N/A
	Rating and characteristics of fuses	No fuses available.	N/A
	Instructions include following subjects permitting safe servicing and continued safety:		P
	a) product specific RISKS may affect service personnel		P
	b) protective measures for these RISKS		P
	c) verification of the safe state after repair		N/A
5.4.6	Integration into systems or effects resulting from special conditions		N/A
	Aspects described in documentation		N/A
6	PROTECTION AGAINST ELECTRIC SHOCK		P
6.1	General	(see Form A.5)	P
6.1.1	Requirements		—
	Protection against electric shock maintained in NORMAL CONDITION and SINGLE FAULT CONDITION		P
	ACCESSIBLE parts not HAZARDOUS LIVE		N/A
	Voltage, current, charge or energy below the limits in NORMAL CONDITION and in SINGLE FAULT CONDITION between:		—
	ACCESSIBLE parts and earth		P
	two ACCESSIBLE parts on same piece of the equipment within a distance of 1,8 m		N/A
	Conformity is checked by the determination of 6.2 and 6.3 followed by the tests of 6.4 to 6.11		P
6.1.2	Exceptions	No removal parts available.	N/A
	Following HAZARDOUS LIVE parts may be accessible to an OPERATOR:		N/A
	a) parts of lamps and lamp sockets after lamp removal		N/A
	b) parts to be replaced by operator only by the use of tool and warning marking		N/A

IEC 61010-1			
Clause	Requirement + Test	Result - Remark	Verdict
	Those parts not HAZARDOUS LIVE 10 s after interruption of supply	(see Forms A.6)	N/A
	Capacitance test if charge is received from internal capacitor	(see Forms A.6 and A.7)	N/A
6.2	Determination of accessible parts	(see Form A.6)	P
6.2.1	General		P
	Unless obviously determination of accessible parts as specified in 6.2.2 to 6.2.4		P
6.2.2	Examination	No openings where the test pin can touch Hazardous Live parts	P
	- with jointed test finger (as specified B.2)		P
	- with rigid test finger (as specified B.1) and a force of 10 N		P
6.2.4	Openings above parts that are HAZARDOUS LIVE	No openings where the test pin can touch Hazardous Live parts	P
	- test pin with length of 100 mm and 4 mm in diameter applied		P
6.2.4	Openings for pre-set controls	No openings for pre-set controls	P
	- test pin with length of 100 mm and 4 mm in diameter applied		P
6.3	Limit values for ACCESSIBLE parts	Completely closed systems. No outputs available.	N/A
6.3.1	Levels in NORMAL CONDITION	(see Form A.7)	N/A
	a) Voltage limits less than 33 V r.m.s. and 46,7 V peak or 70 V d.c.	See above	N/A
	for wet locations voltage limits less than 16 V r.m.s. and 22,6 V peak or 35 V d.c.		N/A
	Voltages are not HAZARDOUS LIVE the levels of:		—
	b) Current less than 0,5 mA r.m.s. for sinusoidal, 0,7 mA peak non sinusoidal or mixed frequencies or 2 mA d.c. when measured with measuring circuit A.1 or A.2 if less than 100 Hz	See above	N/A
	for wet locations measuring circuit A.4 used	See above	N/A
	or		—
	c) Levels of capacitive charge or energy less:	See above	N/A
	1) 45 µC for voltages up to 15 kV peak or d.c. or line A of Figure 3	See above	N/A
	2) 350 mJ stored energy for voltages above 15 kV peak or d.c.	See above	N/A
6.3.2	Levels in SINGLE FAULT CONDITION	(see Form A.7)	N/A

IEC 61010-1			
Clause	Requirement + Test	Result - Remark	Verdict
	a) Voltage limits less than 33 V r.m.s. and 46,7 V peak or 70 V d.c.	See above	N/A
	for wet locations voltage limits less than 16 V r.m.s. and 22,6 V peak or 35 V d.c.	See above	N/A
	Voltages are not HAZARDOUS LIVE the levels of:		—
	b) Current less than 0,5 mA r.m.s. for sinusoidal, 0,7 mA peak non sinusoidal or mixed frequencies or 2 mA d.c. when measured with measuring circuit A.1 or A.2 if less than 100 Hz	See above	N/A
	for wet locations measuring circuit A.4 used	See above	N/A
	or	See above	N/A
	c) Levels of capacitive charge or energy less:	See above	N/A
	1) 45 µC for voltages up to 15 kV peak or d.c. or line A of Figure 3	See above	N/A
	2) 350 mJ stored energy for voltages above 15 kV peak or d.c.	See above	N/A
6.4	Primary means of protection		P
6.4.1	ACCESSIBLE parts prevented from being HAZARDOUS LIVE by one or more of following means:		P
	a) ENCLOSURES or PROTECTIVE BARRIERS (see 6.4.2)		N/A
	b) BASIC INSULATION (see 6.4.3)		P
	c) Impedance (see 6.4.4)		N/A
6.4.2	ENCLOSURES or PROTECTIVE BARRIERS	(see Form A.13)	P
	- meet rigidity requirements of 8.1	Enclosures made of Metal	P
	- meet requirements for BASIC INSULATION, if protection is provided by insulation	Enclosures protection is not provided by insulation	N/A
	- meet requirements of 6.7 for CREEPAGE and CLEARANCES between ACCESSIBLE parts and HAZARDOUS live parts, if protection is provided by limited access		P
6.4.3	BASIC INSULATION	(see Form A.13)	P
	- meet CLEARANCE, CREEPAGE DISTANCE and solid insulation requirements of 6.7	Basic insulation between input and enclosure	P
6.4.4	Impedance	(see Form A.12)	N/A
	Impedance used as primary means of protection meets all of following requirements:		—
	a) limits current or voltage to level of 6.3.2	(see Form A.7)	N/A
	b) RATED for maximum WORKING VOLTAGE and the amount of power it will dissipate		N/A

IEC 61010-1			
Clause	Requirement + Test	Result - Remark	Verdict
	c) CLEARANCE, CREEPAGE DISTANCE between terminations of the impedance meet requirements of BASIC INSULATION of 6.7	(see Form A.13)	N/A
6.5	Additional means of protection in case of SINGLE FAULT CONDITION Additional means of protection in case of SINGLE FAULT CONDITION		P
6.5.1	ACCESSIBLE parts are prevented from becoming HAZARDOUS live by the primary means of protection and supplemented by one of:		P
	a) PROTECTIVE BONDING (see 6.5.2)		P
	b) SUPPLEMENTARY INSULATION (see 6.5.3)	Double or reinforce insulation between the short circuit box to the remote switch. Approved optocoupler used.	P
	c) automatic disconnection of the supply (see 6.5.5)		N/A
	d) current- or voltage-limiting device (see 6.5.6)		N/A
	Alternatively one of the single means of protection is used:		N/A
	e) REINFORCED INSULATION (see 6.5.3)	See above	P
	f) PROTECTIVE IMPEDANCE (see 6.5.4)		N/A
6.5.2	PROTECTIVE BONDING	(see Form A.9, A.10 and A.11)	P
6.5.2.1	ACCESSIBLE conductive parts, may become HARZARDOUS LIVE in SINGLE FAULT CONDITION:		P
	Bonded to the PROTECTIVE CONDUCTOR TERMINAL; or	Separated protective terminal outside of the enclosure	P
	Separated by conductive screen or barrier bonded to PROTECTIVE CONDUCTOR TERMINAL		P
6.5.2.2	Integrity of PROTECTIVE BONDING		P
	a) PROTECTIVE BONDING consists of directly connected structural parts or discrete conductors or both; and withstands thermal and dynamic stresses		P
	b) Soldered connections:		P
	Independently secured against loosening		P
	Not used for other purposes		P
	c) Screw connections are secured		P
	d) PROTECTIVE BONDING not interrupted; or		P
	exempted as removable part carries MAINS SUPPLY INPUT connection		P
	e) Any moveable PROTECTIVE BONDING connection specifically designed, and meets 6.5.2.4		P
	f) No external metal braid of cables used (not regarded as PROTECTIVE BONDING)		N/A

IEC 61010-1			
Clause	Requirement + Test	Result - Remark	Verdict
	g) IF MAINS SUPPLY PASSES THROUGH:		N/A
	Means provided for passing protective conductor;		N/A
	Impedance meets 6.5.2.4		N/A
	h) Protective conductors bare or insulated, if insulated, green/yellow	Green 7 yellow cable used.	P
	Exceptions:		P
	1) earthing braids;		N/A
	2) internal protective conductors etc.;		N/A
	Green/yellow not used for other purposes		P
	TERMINAL suitable for connection of a PROTECTIVE CONDUCTOR, and meets 6.5.2.3		P
6.5.2.3	PROTECTIVE CONDUCTOR TERMINAL		P
	a) Contact surfaces are metal		P
	b) Appliance inlet used		N/A
	c) For rewirable cords and PERMANENTLY CONNECTED EQUIPMENT, PROTECTIVE CONDUCTOR TERMINAL is close to MAINS supply TERMINALS		N/A
	d) If no MAINS supply is required, any PROTECTIVE CONDUCTOR TERMINAL:		P
	Is near terminals of circuit for which protective earthing is necessary		N/A
	External if other terminals external		P
	e) Equivalent current-carrying capacity to MAINS supply TERMINALS	(see Form A.9)	N/A
	f) If plug-in, makes first and breaks last		N/A
	g) If also used for other bonding purposes, protective conductor:	No conductor used.	N/A
	Applied first;		N/A
	Secured independently;		N/A
	Unlikely to be removed by servicing		N/A
	h) PROTECTIVE CONDUCTOR of measuring circuit:	No measuring circuit	N/A
	1) Current RATING equivalent to measuring circuit TERMINAL;		N/A
	2) PROTECTIVE BONDING:		N/A
	Not interrupted; or		N/A
	i) FUNCTIONAL EARTH TERMINALS allow independent connection	No functional earth connection	N/A
	j) If a binding screw used for PROTECTIVE CONDUCTOR TERMINAL:		P
	Suitable size for bond wire		P

IEC 61010-1			
Clause	Requirement + Test	Result - Remark	Verdict
	Not smaller than M 4 (No. 6)	M4	P
	At least 3 turns of screw engaged		P
	Passes tightening torque test	(see Form A.9)	P
	k) Contact pressure not capable being reduced by deformation of materials		P
6.5.2.4	Impedance of PROTECTIVE BONDING of plug-connected equipment	(see Form A.10)	N/A
	Impedance between PROTECTIVE CONDUCTOR TERMINAL and each ACCESSIBLE part where PROTECTIVE BONDING is specified, is:		—
	less than 0,1 Ohm; or		N/A
	less than 0,2 Ohm if equipment is provided with non detachable cord		N/A
6.5.2.5	Bonding impedance of PERMANENTLY CONNECTED EQUIPMENT	(see Form A.10)	P
6.5.2.6	Transformer PROTECTIVE BONDING screen	(see Form A.11)	N/A
	Transformer provided with screen for protective bonding:	No transformer available	N/A
	screen bonding consists of directly connected structural parts or discrete conductors or both; and withstands thermal and dynamic stresses (see 6.5.2.2 a)		N/A
	screen bonding with soldered connection (see 6.5.2.2 b) is:		N/A
	- Independently secured against loosening		N/A
	- Not used for other purposes		N/A
6.5.3	SUPPLEMENTARY and REINFORCED INSULATION		P
	- meet CLEARANCE, CREEPAGE DISTANCE and solid insulation requirements of 6.7		P
6.5.4	PROTECTIVE IMPEDANCE	(see Form A.12)	N/A
	Limits current or voltage to level of 6.3.1 in NORMAL and to level of 6.3.2 in SINGLE FAULT CONDITION	no protective impedance	N/A
	CLEARANCE, CREEPAGE DISTANCE between terminations of the impedance meet requirements of DOUBLE or REINFORCED INSULATION of 6.7	(see Form A.13)	N/A
	The protective impedance consists of one or more of the following:	(see Table 3 and Form A.12)	—
	a) appropriate single component suitable for safety and reliability for protection, it is:		N/A
	1) RATED twice the maximum WORKING VOLTAGE		N/A
	2) resistor RATED for twice the power dissipation for maximum WORKING VOLTAGE		N/A

IEC 61010-1			
Clause	Requirement + Test	Result - Remark	Verdict
	b) combination of components		N/A
	Single electronic device not used as PROTECTIVE IMPEDANCE		N/A
6.5.5	Automatic disconnection of the supply	No such components available.	N/A
	a) RATED to disconnect the load within time specified in Figure 2		N/A
	b) RATED for the maximum load conditions of the equipment		N/A
6.5.6	Current- or voltage limiting devices	(see Form A.12)	N/A
	Device complies with all of:		N/A
	a) RATED to limit the current or voltage to the level of 6.3.2	(see Form A.8)	N/A
	b) RATED for the maximum working voltage; and		N/A
	RATED for the maximum operational current if applicable		N/A
	c) CLEARANCE, CREEPAGE DISTANCE between terminations of the impedance meet requirements of SUPPLEMENTARY INSULATION of 6.7	(see Form A.13)	N/A
6.6	Connections to external circuits	No connection to external circuits. Connecting only to an inverter, but this is apart of the completely system for use.	N/A
6.6.1	Connections do not cause ACCESSIBLE parts of the following to become HAZARDOUS LIVE in NORMAL CONDITION or SINGLE FAULT CONDITION:		N/A
	- the external circuits		N/A
	- the equipment		N/A
	Protection achieved by separation of circuits; or		N/A
	short circuit of separation does not cause a HAZARD		N/A
	Instructions or markings for each terminal include:		N/A
	a) RATED conditions for TERMINAL		N/A
	b) Required RATING of external circuit INSULATION		N/A
6.6.2	TERMINALS for external circuits		N/A
	TERMINALS which receive a charge from an internal capacitor are not HAZARDOUS LIVE after 10 s of interrupting supply connection	(see Form A.7)	N/A
6.6.3	Circuits with terminals which are HAZARDOUS LIVE	See above.	N/A
	These circuits are:		N/A
	Not connected to ACCESSIBLE conductive parts; or		N/A

IEC 61010-1			
Clause	Requirement + Test	Result - Remark	Verdict
	Connected to ACCESSIBLE conductive parts, but are not MAINS circuits and have one TERMINAL contact at earth potential		N/A
	No ACCESSIBLE conductive parts are HAZARDOUS LIVE		N/A
6.6.4	ACCESSIBLE terminals for stranded conductors		P
	No RISK of accidental contact because:	No risk.	P
	Located or shielded	Located and shield. Approved terminals used.	P
	Self-evident or marked whether or not connected to ACCESSIBLE conductive parts		P
	ACCESSIBLE TERMINALS will not work loose		P
6.7	Insulation requirements	(see Form A.5)	P
6.7.1	The nature of insulation		P
6.7.1.1	Insulation between ACCESSIBLE parts or between separate circuits consist of CLEARANCES, CREEPAGE DISTANCES and solid insulation if provided as protection against a HAZARD		P
6.7.1.2	CLEARANCES		P
	Required CLEARANCES reflecting factors of 6.7.1.1	(see Form A.5)	P
	Equipment rated for operating altitude greater than 2000 m correction factor of Table 3 of 61010-1 applied		P
6.7.1.3	CREEPAGE DISTANCES		P
	Required CLEARANCES reflecting factors of 6.7.1.1	(see Form A.5)	P
	CTI material group reflected by requirements		P
	CTI test performed		P
6.7.1.4	Solid insulation		P
	Required CLEARANCES reflecting factors of 6.7.1.1	(see Form A.5)	P
6.7.1.5	Requirements for insulation according to type of circuit	(see Form A.5)	P
	a) 6.7.2 MAINS circuits of OVERVOLTAGE CATEGORY II up to nominal supply voltage of 300 V		N/A
	b) 6.7.3 Secondary circuits separated from circuits defined in a) by transformer		N/A
	c) K.1 MAINS circuits of OVERVOLTAGE CATEGORY III and IV or OVERVOLTAGE CATEGORY II over 300 V		P
	d) K.2 Secondary circuits separated from circuits defined in a) by transformer		N/A
	e) K.3 Circuits having one or more of:		N/A
	1) maximum TRANSIENT OVERVOLTAGE is limited to known level below the level of MAINS CIRCUIT		N/A

IEC 61010-1			
Clause	Requirement + Test	Result - Remark	Verdict
	2) maximum TRANSIENT OVERVOLTAGE above the level of MAINS CIRCUIT		N/A
	3) WORKING VOLTAGE is the sum of more than one circuit or a mixed voltage		N/A
	4) WORKING VOLTAGE includes recurring peak voltage, may include non-sinusoidal or non-periodic waveform		N/A
	5) WORKING VOLTAGE with a frequency above 30 kHz		N/A
6.7.2	Insulation for MAINS CIRCUITS of OVERVOLTAGE CATEGORY II with a nominal supply voltage up to 300 V	See K1.	N/A
6.7.2.1	CLEARANCES and CREEPAGE DISTANCES	(see Form A.13)	N/A
	Values for MAINS CIRCUITS of table 4 are met		N/A
	Coatings to achieve reduction to POLLUTION DEGREE I comply with requirements of Annex H		N/A
6.7.2.2	Solid insulation	See above	N/A
6.7.2.2.1	Withstands electrical and mechanical stresses in normal use and all RATED environmental conditions of 1.4		N/A
	Equipment passed voltage tests of 6.8.3 with values of Table 5	(see Form A.14)	N/A
	Complies as applicable:		V
	a) ENCLOSURE or PROTECTIVE BARRIER Clause 8		N/A
	b) moulded and potted parts requirements of 6.7.2.2.2		N/A
	c) inner layers of printed wiring boards requirements of 6.7.2.2.3		N/A
	d) thin-film insulation requirements of 6.7.2.2.4		N/A
6.7.2.2.2	Moulded and potted parts	See above	N/A
	Conductors between same two layers are separated by at least 0,4 mm after moulding is completed		N/A
6.7.2.2.3	Inner insulation layers of printed wiring boards		N/A
	Separated by at least 0,4 mm between same two layers		N/A
	REINFORCED INSULATION have adequate electric strength; one of following methods used:		N/A
	a) thickness at least 0,4 mm		N/A
	b) insulation is assembled of minimum two separate layers, each RATED for test voltage of Table 5 for BASIC INSULATION		N/A

IEC 61010-1			
Clause	Requirement + Test	Result - Remark	Verdict
	c) insulation is assembled of minimum two separate layers, where the combination is rated for test voltage of Table 5 for REINFORCED INSULATION		N/A
6.7.2.2.4	Thin-film insulation	No thin film insulation	N/A
	Conductors between same two layers are separated by applicable CLEARANCES and CREEPAGE DISTANCES		N/A
	REINFORCED INSULATION have adequate electric strength; one of following methods used:		N/A
	a) thickness at least 0,4 mm		N/A
	b) insulation is assembled of min two separate layers, each RATED for test voltage of Table 5 for BASIC INSULATION		N/A
	c) insulation is assembled of min three separate layers, where the combination of two layers passed voltage tests of 6.8.3 with values of Table 5 for REINFORCED INSULATION	(see Form A.14)	N/A
6.7.3	Insulation for secondary circuits derived from MAINS of OVERVOLTAGE CATEGORY II up to 300 V	No such components used.	N/A
6.7.3.1	Secondary circuits where separation from MAINS CIRCUITS is achieved by a transformer providing:		—
	- REINFORCED INSULATION		N/A
	- DOUBLE INSULATION		N/A
	- screen connected to the PROTECTIVE CONDUCTOR TERMINAL		N/A
6.7.3.2	CLEARANCES		N/A
	a) meet the values of Table 6 for BASIC INSULATION and SUPPLEMENTARY INSULATION; or		N/A
	twice the values of Table 6 for REINFORCED INSULATION		N/A
	or		—
	b) pass the voltage tests of 6.8 with values of Table 6; with following adjustments:	(see Form A.14)	N/A
	1) values for REINFORCED INSULATION are 1,6 times the values for BASIC INSULATION		N/A
	2) if operating altitude is greater than 2000 m values of CLEARANCES multiplied with factor of Table 3		N/A
	3) minimum CLEARANCE is 0,2 mm for POLLUTION DEGREE 2 and 0,8 mm for POLLUTION DEGREE 3		N/A
6.7.3.3	CREEPAGE DISTANCES		N/A
	Based on WORKING VOLTAGE meets the values of Table 7 for BASIC and SUPPLEMENTARY INSULATION		N/A

IEC 61010-1			
Clause	Requirement + Test	Result - Remark	Verdict
	Values for REINFORCED INSULATION are twice the values of BASIC INSULATION		N/A
	Coatings to achieve reduction to POLLUTION DEGREE I comply with requirements of Annex H		N/A
6.7.3.4	Solid insulation	See above	N/A
6.7.3.4.1	Withstands electrical and mechanical stresses in normal use and all RATED environmental conditions of 1.4		N/A
	a) Equipment passed voltage test of 6.8.3.1 for 5 s with VALUES of Table 6 for BASIC and SUPPLEMENTARY INSULATION	(see Form A.14)	N/A
	values for REINFORCED INSULATION are 1,6 times the values of BASIC INSULATION		N/A
	b) if WORKING VOLTAGE exceeds 300 V, equipment passed voltage test of 6.8.3.1 for 1 min with a test voltage of 1,5 times working voltage for BASIC or SUPPLEMENTARY INSULATION	(see Form A.14)	N/A
	value for REINFORCED INSULATION are twice the WORKING VOLTAGE		N/A
	Complies as applicable:		N/A
	1) ENCLOSURE or protective barrier Clause 8		N/A
	2) moulded and potted parts requirements of 6.7.3.4.2		N/A
	3) inner layers of printed wiring boards requirements of 6.7.3.4.3		N/A
	4) thin-film insulation requirements of 6.7.3.4.4		N/A
6.7.3.4.2	Moulded and potted parts	See above	N/A
	Conductors between same two layers are separated by applicable distances of Table 8		N/A
6.7.3.4.3	Inner insulation layers of printed wiring boards	See above	N/A
	Separated by at least by applicable distances of Table 8 between same two layers		N/A
	REINFORCED INSULATION have adequate electric strength; one of following methods used:		N/A
	a) thickness at least applicable distance of Table 8		N/A
	b) insulation is assembled of minimum two separate layers, each RATED for test voltage of Table 6 for BASIC INSULATION		N/A
	c) insulation is assembled of min two separate layers, where the combination is rated for 1,6 times the test voltage of Table 6		N/A
6.7.3.4.4	Thin-film insulation	See above	N/A

IEC 61010-1			
Clause	Requirement + Test	Result - Remark	Verdict
	Conductors between same two layers are separated by applicable CLEARANCES and CREEPAGE DISTANCES		N/A
	REINFORCED INSULATION have adequate electric strength; one of following methods used:		N/A
	a) thickness at least applicable distance of Table 8		N/A
	b) insulation is assembled of min two separate layers, each RATED for test voltage of Table 6 for BASIC INSULATION		N/A
	c) insulation is assembled of min three separate layers, where the combination of two layers passed voltage tests with 1,6 time values of Table 6:	(see Form A.14)	N/A
	a.c. test of 6.8.3.1; or		N/A
	d.c. test of 6.8.3.2 for circuits stressed only by d.c. voltages		N/A
6.8	Procedure for dielectric strength tests	(see Form A.5 and A.14)	P
6.9	Constructional requirements for protection against electric shock		P
6.9.1	If a failure could cause a HAZARD:		P
	a) Security of wiring connections		P
	b) Screws securing removable covers		P
	c) Accidental loosening		P
	d) CREEPAGE and CLEARANCES not reduced below the values of basic insulation by loosening		P
6.9.2	Material not to be used for safety relevant insulation:	Approved components used.	P
	Easily damaged materials not used		P
	Non-impregnated hydroscopic materials not used		P
6.9.3	Colour coding		P
	Green-and-yellow insulation shall not be used except:		P
	a) protective earth conductors;		P
	b) protective bonding conductors;		N/A
	c) potential equilization conductors;		N/A
	d) functional earth conductors		N/A
6.10	Connection to MAINS supply source and connections between parts of equipment		P
6.10.1	MAINS supply cords	No mains supply cord system. PERMANENTLY CONNECTED EQUIPMENT	N/A
	RATED for maximum equipment current (see 5.1.3c)		N/A
	Cable complies with IEC 60227 or IEC 60245		N/A

IEC 61010-1			
Clause	Requirement + Test	Result - Remark	Verdict
	Heat-resistant if likely to contact hot parts		N/A
	Temperature RATING (cord and inlet) .....:		N/A
	Green/yellow used only for connection to PROTECTIVE CONDUCTOR TERMINALS		N/A
	Detachable cords with IEC 60320 MAINS connectors:		—
	Conform to IEC 60799; or		N/A
	Have the current RATING of the MAINS connector		N/A
6.10.2	Fitting of non-detachable MAINS supply cords	Permanently connected equipment.	N/A
6.10.2.1	Cord entry		N/A
	Inlet or bushing smoothly rounded; or		N/A
	Insulated cord guard protruding >5D		N/A
6.10.2.2	Cord anchorage		N/A
	Protective earth conductor is the last to take the strain		N/A
	a) Cord is not clamped by direct pressure from a screw		N/A
	b) Knots are not used		N/A
	c) Cannot push the cord into the equipment to cause a HAZARD		N/A
	d) No failure of cord insulation in anchorage with metal parts		N/A
	e) Not to be loosened without a tool		N/A
	f) Cord replacement does not cause a HAZARD and method of strain relief is clear		N/A
	Push-pull and or torque test	(see Form A.15)	N/A
6.10.3	Plugs and connectors	Permanently connected equipment.	N/A
	MAINS supply plugs, connectors etc., conform with relevant specifications		N/A
	If equipment supplied at voltages below 6.3.2.a) or from a sole source:		N/A
	Plugs of supply cords do not fit MAINS sockets above rated SUPPLY voltage		N/A
	MAINS type plugs used only for connection to MAINS supply		N/A
	Plug pins which receive a charge from an internal capacitor	(see Form A.7)	N/A
	Accessory MAINS socket outlets:		—
	a) Marking if accepts a standard MAINS plug (see 5.1.3e)		N/A

IEC 61010-1			
Clause	Requirement + Test	Result - Remark	Verdict
	b) Input has a protective earth conductor if outlet has EARTH TERMINAL CONTACT		N/A
6.11	Disconnection from supply source	Statement in the instruction.	P
6.11.1	Disconnects all current carrying conductors		P
6.11.2	Exceptions		N/A
6.11.3	Requirements according to type of equipment		P
6.11.3.1	PERMANENTLY CONNECTED EQUIPMENT and multi-phase equipment:		P
	Employs switch or circuit-breaker	No such components. Information in the instruction.	N/A
	If switch or circuit-breaker is not part of the equipment, documentation requires:		—
	a) Switch or circuit-breaker to be included in building installation	Statement in the instruction.	P
	b) Suitable location easily reached	Statement in the instruction.	P
	c) Marking as disconnecting for the equipment		N/A
6.11.3.2	Single-phase cord-connected equipment	No such cord-connected equipment.	N/A
	Equipment is provided with one of the following:		N/A
	a) Switch or circuit-breaker		N/A
	b) Appliance coupler (disconnectable without tool)		N/A
	c) Separable plug (without locking device)		N/A
6.11.4	Disconnecting devices	No disconnecting device.	N/A
	Electrically close to the SUPPLY		N/A
6.11.4.1	Switches and circuit-breakers		N/A
	When used as disconnection device:		—
	Meets IEC 60947-1 and IEC 60947-3		N/A
	Marked to indicate function .....:		N/A
	Not incorporated in MAINS cord		N/A
	Does not interrupt PROTECTIVE EARTH CONDUCTOR		N/A
6.11.4.2	Appliance couplers and plugs		N/A
	Where an appliance coupler or separable plug is used as the disconnecting device (see 6.11.3.2):		N/A
	Readily identifiable and easily reached by the operator		N/A
	Single-phase portable equipment cord length not more than 3 m		N/A
	PROTECTIVE EARTH CONDUCTOR connected first and disconnected last		N/A

IEC 61010-1			
Clause	Requirement + Test	Result - Remark	Verdict
7	**PROTECTION AGAINST MECHANICAL HAZARDS**		P
7.1	Equipment does not cause a mechanical HAZARD in NORMAL nor in SINGLE FAULT CONDITION		P
	Conformity is checked by 7.2 to 7.7		P
7.2	Sharp edges	No sharp edges available.	P
	Easily touched parts are smooth and rounded		P
	Do not cause injury during NORMAL USE and		P
	Do not cause injury during SINGLE FAULT CONDITION		P
7.3	Moving parts	No moving parts	N/A
7.3.1	HAZARDS from moving parts limited to a tolerable level with the conditions specified in 7.3.2 and 7.3.5		N/A
	RISK assessment in accordance with 7.3.3 carried out		N/A
7.3.2	Exceptions		N/A
	Access to HAZARDOUS moving parts permitted under following circumstances:		N/A
	a) obviously intended to operate on parts or materials outside of the equipment		N/A
	inadvertent touching of moving parts minimized by equipment design (e .g. guards or handles)		N/A N/A
	b) If operator access is unavoidable outside normal use following precautions have been taken:		N/A
	1) Access requires TOOL		N/A
	2) Statement about training in the instructions		N/A
	3) Warning markings on covers prohibiting access by untrained operators		N/A
	or symbol 14 with full details in documentation		N/A
7.3.3	RISK assessment for mechanical HAZARDS to body parts	See above	N/A
	RISK is reduced to a tolerable level by protective measures as specified in Table 12		N/A
	Minimum protective measures:		—
	A. Low level measures		N/A
	B. Moderate measures		N/A
	C. Stringent measures		N/A
7.3.4	Limitation of force and pressure	(see Form A.16)	N/A
	Following levels are met in normal and single fault condition:		N/A
	Continuous contact pressure below 50 N / cm² with force below 150 N		N/A

IEC 61010-1			
Clause	Requirement + Test	Result - Remark	Verdict
	Temporary force below 250 N for an area at least of 3 cm² for a maximum duration of 0,75 s		N/A
7.3.5	Gap limitations between moving parts	(see Form A.16)	N/A
7.3.5.1	Access normally allowed	See above	N/A
	If levels of 7.3.4 exceeded and body part may be inserted minimum gap as specified in Table 13 assured in NORMAL and in SINGLE FAULT CONDITION		N/A
7.3.5.2	Access normally prevented		N/A
	Maximum gap as specified in Table 14 assured in NORMAL and in SINGLE FAULT CONDITION		N/A
7.4	Stability	Wall mounting system.	P
	Equipment not secured to building structure is physical stable		N/A
	Stability maintained after opening of drawers etc. by automatic means, or		N/A
	warning marking requires the application of means		N/A
	Compliance checked by following tests as applicable:		—
	a) 10° tilt test for other than handheld equipment		N/A
	b) multi-directional force test for equipment exceeds height of 1 m and mass of 25 kg		N/A
	c) downward force test for floor-standing equipment		N/A
	d) overload test with 4 times maximum load for castor or support that supports greatest load		N/A
	e) castor or support that supports greatest load removed from equipment		N/A
7.5	Provisions for lifting and carrying	See above	N/A
7.5.1	Equipment more than 18 kg :		—
	Has means for lifting or carrying; or		N/A
	Directions in documentation		N/A
7.5.2	Handles or grips	See above	N/A
	Handles or grips withstand four times weight		N/A
7.5.3	Lifting devices and supporting parts	See above	N/A
	Rated for maximum load; or		N/A
	tested with four times maximum static load		N/A
7.6	Wall mounting	Adequate dimensions used.	P
	Mounting brackets withstand four times weight		P
7.7	Expelled parts	No such parts available.	N/A
	Equipment contains or limits the energy		N/A
	Protection not removable without the aid of a tool		N/A

IEC 61010-1			
Clause	Requirement + Test	Result - Remark	Verdict
8	RESISTANCE TO MECHANICAL STRESSES		P
8.1	Equipment does not cause a HAZARD when subjected to mechanical stresses in NORMAL USE	Adequate mechanical stresses	P
	Normal protection level is 5 J		P
	Levels below 5 J but not less than 1 J are acceptable if all of following criteria are met:		P
	a) lower level justified by RISK assessment of manufacturer		P
	b) equipment installed in its intended application is not easily touched		P
	c) only occasional access during NORMAL USE		P
	d) IK code in accordance to IEC 62262 marked or symbol 14 used with full information in the documentation		N/A
	For non-metallic ENCLOSURES rated below 2 °C ambient temperature value chosen for minimum rated temperature		N/A
	Impact energies between IK values, the IK code marked for nearest lower value		N/A
	Conformity is checked by performing following tests:		—
	1) static test of 8.2.1		P
	2) impact test of 8.2.2 with 5 J except for HAND-HELD EQUIPMENT		P
	if impact energy not selected to 5 J alternate method of IEC 62262 used		P
	3) drop test of 8.3.1 or 8.3.2 except for FIXED and EQUIPMENT with mass over 100 kg	Equipment < 100 kg	N/A
	Equipment rated with an impact rating of IK 08 that obviously meets the criteria		N/A
	After the tests inspection with following results:		—
	- HAZARDOUS LIVE parts above the limits of 6.3.2 not ACCESSIBLE		P
	- insulation pass the voltage tests of 6.8	(see Form A.24)	P
	i) no leaks of corrosive and harmful substances		P
	ii) ENCLOSURE shows no cracks resulting in a HAZARD		P
	iii) CLEARANCES not less than their permitted values		P
	iv) insulation of internal wiring remains undamaged		P
	v) PROTECTIVE BARRIERS not damaged or loosened		P
	vi) No moving parts exposed, except permitted by 7.3	No moving parts available.	N/A

IEC 61010-1			
Clause	Requirement + Test	Result - Remark	Verdict
	vii) no damage which could cause spread of fire		P
8.2	ENCLOSURE rigidity test		P
8.2.1	Static test	Adequate mechanical stresses	P
	- 30 N with 12 mm rod to each part of ENCLOSURE		P
	- in case of doubt test conducted at maximum RATED ambient temperature		P
8.2.2	Impact test		P
	Impact applied to any part of ENCLOSURE causing a HAZARD if damaged		P
	Impact energy level and corresponding IK code .....:		N/A
	Non-metallic ENCLOSURES cooled to minimum RATED ambient temperature if below 2 °C		N/A
8.3	Drop test	Wall mounting system	N/A
8.3.1	Other than HAND-HELD and DIRECT-PLUG-IN EQUIPMENT		N/A
	Tests conducted with a drop height or angle of.....:		N/A
8.3.2	HAND-HELD and DIRECT-PLUG-IN EQUIPMENT		N/A
	Non-metallic ENCLOSURES cooled to minimum RATED ambient temperature if below 2 °C		N/A
	Drop test conducted with an height of 1 m		N/A

9	PROTECTION AGAINST THE SPREAD OF FIRE		P
9.1	No spread of fire in NORMAL and SINGLE FAULT CONDITION		P
	MAINS supplied equipment meets requirements of 9.6 additionally		P
	Conformity is checked by minimum one or a combination of the following (see Figure 11):	(see Form A.17)	P
	a) Fault test of 4.4; or	(see Form A.1 and Form A.2)	P
	b) Application of 9.2 (eliminating or reducing the sources of ignition); or		N/A
	c) Application of 9.2 (containment of fire within the equipment)		P
9.2	Eliminating or reducing the sources of ignition within the equipment		N/A
	a) 1) Limited-energy circuit (see 9.4); or		N/A
	2) BASIC INSULATION provided for parts of different potential; or	(see Form A.5 and A.14)	N/A
	Bridging the insulation does not cause ignition	(see Form A.2)	N/A
	b) Surface temperature of liquids and parts (see 9.5)		N/A

IEC 61010-1			
Clause	Requirement + Test	Result - Remark	Verdict
	c) No ignition in circuits designed to produce heat	(see Form A.2)	N/A
9.3	Containment of the fire within the equipment, should it occur		P
	a) Energizing of the equipment is controlled by an operator held switch		N/A
	b) ENCLOSURE is conform with constructional requirements of 9.3.1; and		P
	Requirements of 9.5 are met		P
9.3.1	Constructional requirements	No openings at all. (completely enclosed system)	P
	a) Connectors and insulating material have flammability classification V-2 or better	(see Table: 3 or Form A.18)	P
	b) Insulated wires and cables are flame retardant (VW-1 or equivalent)	(see Table: 3 or Form A.18)	P
	c) ENCLOSURE meets following requirements:	(see Form A.17)	P
	1) Bottom and sides in arc of 5 ° (see Figure 13) to non-limited circuits (9.4) meets:	No openings at all. (completely enclosed system)	P
	i) no openings; or	See above	P
	ii) perforated as specified in Table 16; or		P
	iii) metal screen with a mesh; or		P
	iv) baffles as specified in Figure 12		P
	2) Material of ENCLOSURE and any baffle or flame barrier is made of:		P
	Metal (except magnesium); or		P
	Non-metallic materials have flammability classification V-1 or better	(see Table: 3 or Form A.18)	P
	3) ENCLOSURE and any baffle or flame barrier have adequate rigidity		P
9.4	Limited-energy circuit	(see Form A.19)	N/A
	a) Potential not more than 30 r.m.s. and 42.4 V peak, or 60 V dc		N/A
	b) Current limited by one of following means:		N/A
	1) Inherently or by impedance (see Table 17); or		N/A
	2) Over current protective device (see Table 18); or		N/A
	3) A regulating network limits also in SINGLE FAULT CONDITION (see Table 17)		N/A
	c) Is separated by at least BASIC INSULATION		N/A
	Fuse or a nonadjustable electromechanical device is used		N/A

IEC 61010-1			
Clause	Requirement + Test	Result - Remark	Verdict
9.5	Requirements for equipment containing or using flammable liquids	No flammable liquids inside the system.	N/A
	Flammable liquids contained in or specified for use with equipment do not cause spread of fire	(see Form A.20)	N/A
	RISK is reduced to a tolerable level :		N/A
	a) The temperature of surface or parts in contact with flammable liquids is 25 °C below fire point		N/A
	b) The quantity of liquid is limited		N/A
	c) Flames are contained within the equipment		N/A
	Detailed instructions for RISK-reduction provided		N/A
9.6	Overcurrent protection	.	P
9.6.1	MAINS supplied equipment protected		N/A
	BASIC INSULATION between MAINS parts of opposite polarity provided	(see Form A.14)	N/A
	Devices not in the protective conductor	No overcurrent protection available	N/A
	Fuses or single-pole circuit-breakers not fitted in neutral (multi-phase)		N/A
9.6.2	PERMANENTLY CONNECTED EQUIPMENT		P
	Overcurrent device:		N/A
	Fitted within the equipment; or		N/A
	Specified in manufacturer's instructions	Statement in the instruction.	P
9.6.3	Other equipment		N/A
	Protection within the equipment		N/A
10	EQUIPMENT TEMPERATURE LIMITS AND RESISTANCE TO HEAT		P
10.1	Surface temperature limits for protection against burns		P
	Easily touched surfaces within the limits in NORMAL and in SINGLE FAULT CONDITION:	(see Form A.21A)	P
	- at an specified ambient temperature of 40 °C		P
	- for equipment rated above 40 °C ambient temperature limits not exceeded raised by the difference to 40 °C		P
	Heated surfaces necessary for functional reasons exceeding specified values:	Heater Band does stays within limits	N/A
	Are recognizable as such by appearance or function; or		N/A
	Are marked with symbol 13		N/A

IEC 61010-1			
Clause	Requirement + Test	Result - Remark	Verdict
	Guards are not removable without tool		N/A
10.2	Temperatures of windings	No windings (Transformer) available.	N/A
	Limits not exceeded in:	(see Form A.21B)	N/A
	NORMAL CONDITION		N/A
	SINGLE FAULT CONDITION		N/A
10.3	Other temperature measurements		P
	Following measurements conducted if applicable:	(see Form A.21A)	N/A
	a) Value of 60 °C of field-wiring terminal box not exceeded		N/A
	b) Surface of flammable liquids and parts in contact with this liquids		N/A
	c) Surface of non-metallic ENCLOSURES		N/A
	d) Parts made of insulating material supporting parts connected to MAINS supply		N/A
	e) Terminals carrying a current more than 0,5 A		P
10.4	Conduct of temperature test		P
10.4.1	Tests conducted under reference test conditions and manufacturer's instructions	(see Form A.21A)	P
10.4.2	Temperature measurement of heating equipment		N/A
	Tests conducted in test corner	(see Form A.21A)	N/A
10.4.3	Equipment intended for installation in a cabinet or wall		P
	Equipment built in as specified in installation instructions	(see Form A.21A)	P
10.5	Resistance to heat		P
10.5.1	Integrity of CLEARANCE and CREEPAGE DISTANCES	(see Form A.13)	P
10.5.2	Non-metallic ENCLOSURES	(see Form A.22)	P
	Within 10 min after treatment:		—
	Equipment subjected to suitable stresses of 8.2 and 8.3 complying with criteria of 8.1		P
10.5.3	Insulating material	No isolation material carrying terminals.	N/A
	a) Parts supporting parts connected to MAINS supply		N/A
	b) TERMINALS carrying a current more than 0.5 A		N/A
	Examination of material data; or		N/A
	in case of doubt:		N/A
	1) Ball pressure test; or		N/A
	2) Vicat softening test of ISO 306		N/A

IEC 61010-1			
Clause	Requirement + Test	Result - Remark	Verdict
11	PROTECTION AGAINST HAZARDS FROM FLUIDS		P
11.1	Protection to OPERATORS and surrounding area provided by EQUIPMENT	No fluids in used in normal and single fault conditions	N/A
	All fluids specified by manufacturer considered		N/A
11.2	Cleaning	(see Form A.24) Cleaning with a wet cloth	P
11.3	Spillage	(see Form A.24)	N/A
11.4	Overflow	(see Form A.24) No fluids inside the housing	N/A
11.5	Battery electrolyte	No battery in use	N/A
	Battery electrolyte leakage presents no HAZARD		N/A
11.6	Specially protected equipment	(see Form A.24)	N/A
11.7	Fluid pressure and leakage	No fluids with high pressure	N/A
11.7.1	Maximum pressure .....:	(see Form A.25)	N/A
	Maximum pressure of any part does not exceed P_{RATED}		N/A
11.7.2	Leakage and rupture at high pressure		N/A
	Fluid containing parts subjected to hydraulic test if:	(see Form A.25)	N/A
	a) product of pressure and volume > 200 kPal; and		N/A
	b) pressure > 50 kPa		N/A
	Parts of refrigerating systems meets pressure-related requirements of IEC 60335-24 or IEC 60335-24		N/A
11.7.3	Leakage from low-pressure parts	(see Form A.25)	N/A
11.7.4	Overpressure safety device		N/A
	Does not operate in NORMAL USE		N/A
	a) Connected as close as possible to parts intended to be protected		N/A
	b) Easy access for inspection, maintenance and repair		N/A
	c) Adjustment only with TOOL		N/A
	d) No discharge towards person		N/A
	e) No HAZARD from deposit of discharged material		N/A
	f) Adequate discharge capacity		N/A
	No shut-off valve between overpressure safety device and protected parts		N/A
12	PROTECTION AGAINST RADIATION, INCLUDING LASER SOURCES, AND AGAINST SONIC AND ULTRASONIC PRESSURE	No parts in use	N/A

IEC 61010-1			
Clause	Requirement + Test	Result - Remark	Verdict
12.1	Equipment provides protection		N/A
12.2	Equipment producing ionizing radiation		N/A
12.2.1	Ionizing radiation	(see Form A.26)	N/A
12.2.1.1	Equipment meets the following requirements:		N/A
	a) if intended to emit radiation meets requirements of 12.2.1.2; or		N/A
	tested, classified and marked in accordance to IEC 60405		N/A
	b) if only emits stray radiation meets requirements of 12.2.1.3		N/A
12.2.1.2	Equipment intended to emit radiation		N/A
	Effective dose rate of radiation measured .....:		N/A
	If dose rate exceeds 5 µSv/h marked with the following:		N/A
	a) Symbol 17 (ISO 361)		N/A
	b) Abbreviations of the radionuclides.....:		N/A
	c) With maximum dose at 1 m; or .....:		N/A
	with dose rate value between 1 µSv/h and 5 µSv/h in m .....:		N/A
12.2.1.3	Equipment not intended to emit radiation		N/A
	Limit for unintended stray radiation of 1 µSv/h at any easily reached point kept .....:		N/A
12.2.2	Accelerated electrons		N/A
	Compartments opened only by the use of a TOOL		N/A
12.3	Ultraviolet (UV) radiation		N/A
	No unintentional HAZARDOUS escape of UV radiation:		—
	- checked by inspection; and		N/A
	- evaluation of RISK assessment documentation		N/A
12.4	Micro-wave radiation		N/A
	Power density does not exceed 10 W/m^2 .....:		N/A
12.5	Sonic and ultrasonic pressure		N/A
12.5.1	Sound level	(see Form A.27) No sound level in use	N/A
	No HAZARDOUS sound emission		N/A
	Maximum sound pressure level measured and calculated for maximum sound power level as specified in ISO 3746 or ISO 9614-1		N/A
	Instruction describes measures for protection		N/A
12.5.2	Ultrasonic pressure	(see Form A.27)	N/A

IEC 61010-1			
Clause	Requirement + Test	Result - Remark	Verdict
	Equipment not intended to emit ultrasound does not exceed limit of 110 dB between 20 kHz and 100 kHz		N/A
	Equipment intended to emit ultrasound:		N/A
	Outside useful beam does not exceed limit of 110 dB between 20 kHz and 100 kHz		N/A
	If inside useful beam above values exceeded:		N/A
	Marked with Symbol 14 of Table 1		N/A
	and following information in the documentation:		N/A
	a) dimensions of useful beam		N/A
	b) area where ultrasonic pressure exceed 110 dB		N/A
	c) maximum sound pressure inside beam area		N/A
12.6	Laser sources	No LEDs for indication in use	N/A
	Equipment meets requirements of IEC 60825-1		N/A
13	PROTECTION AGAINST LIBERATED GASES, EXPLOSION AND IMPLOSION	No Explosion Gases in use	N/A
13.1	Poisonous and injurious gases		N/A
	No poisonous or injurious gases or substances liberated in NORMAL CONDITION		N/A
	Attached data/test reports demonstrate conformity		N/A
13.2	Explosion and implosion	See above	N/A
13.2.1	Components		N/A
	Components liable to explode:		—
	Pressure release device provided; or		N/A
	Apparatus incorporates operator protection (see also 7.7)		N/A
	Pressure release device:		—
	Discharge without danger		N/A
	Cannot be obstructed		N/A
13.2.2	Batteries and battery charging	(see Form A.28)	N/A
	If explosion or fire HAZARD could occur:		—
	Protection incorporated in the equipment; or		N/A
	Instructions specify batteries with built-in protection		N/A
	In case of wrong type of battery used:		—
	No HAZARD; or		N/A
	Warning by marking and within instructions		N/A
	Equipment with means to charge rechargeable batteries:		—

IEC 61010-1			
Clause	Requirement + Test	Result - Remark	Verdict
	Warning against the charging of non-rechargeable batteries; and		N/A
	Type of rechargeable battery indicated; or		N/A
	Symbol 14 used		N/A
	Battery compartment design		N/A
	Single component failure		N/A
	Polarity reversal test		N/A
13.2.3	Implosion of cathode ray tubes	See above	N/A
	If maximum face dimensions > 160 mm .....:		—
	Intrinsically protected and correctly mounted; or		N/A
	ENCLOSURE provides protection:		N/A
	If non-intrinsically protected:		—
	Screen not removable without TOOL		N/A
	If glass screen, not in contact with surface of tube		N/A
14	COMPONENTS AND SUBASSEMBLIES		P
14.1	Where safety is involved, components and subassemblies meet relevant requirements	(see Table 3)	P
14.2	Motors	No Motors in used	N/A
14.2.1	Motor temperatures		N/A
	Does not present a HAZARD when stopped or prevented form starting; or	(see Form A.21)	N/A
	Protected by over-temperature or thermal protection device conform with 14.3		N/A
14.2.2	Series excitation motors		N/A
	Connected direct to device, if over-speeding causes a HAZARD		N/A
14.3	Overtemperature protection devices	No overtemperature protection devices in use.	N/A
	Devices operating in a SINGLE FAULT CONDITION	(see Form A.29)	N/A
	a) Reliable function is ensured		N/A
	b) RATED to interrupt maximum current and voltage		N/A
	c) Does not operate in NORMAL USE		N/A
	If self-resetting device used to prevent a HAZARD, protected part requires intervention before restarting		N/A
14.4	Fuse holders	No fuses available.	N/A
	No access to HAZARDOUS LIVE parts		N/A

IEC 61010-1			
Clause	Requirement + Test	Result - Remark	Verdict
14.5	MAINS voltage selecting devices	No Voltage selecting devices in use	N/A
	Accidental change not possible		N/A
14.6	MAINS transformers tested outside equipment	(see Forms A.30 and A.31) No Transformers in use	N/A
14.7	Printed circuit boards	Approved PCB´s used.	P
	Data shows conformity with V-1 of IEC 60695-11-10 or better; or		P
	Test shows conformity with V-1 of IEC 60695-11-10 or better	(see Form A.18)	P
	Not applicable for printed wiring boards with limited-energy circuits (9.4)		N/A
14.8	Circuits or components used as transient overvoltage limiting devices	Approved VDR used	P
	Test conducted between each pair of MAINS SUPPLY TERMINALS	(see Form A.32)	P
	No HAZARD resulting from rupture or overheating of the component:		P
	- no bridging of safety relevant insulation		P
	- no heat to other parts above the self-ignition points		N/A
15	PROTECTION BY INTERLOCKS	No Interlocks available.	N/A
15.1	Interlocks are designed to remove a HAZARD before OPERATOR exposed		N/A
15.2	Prevention of reactivation		N/A
15.3	Reliability		N/A
	Single fault unlikely to occur; or		N/A
	Cannot cause a HAZARD		N/A
16	HAZARDS RESULTING FROM APPLICATION		N/A
16.1	REASONABLY FORESEEABLE MISUSE	Foreseeable failure application: • Harmonized standard used • Any hedge clause procedure unknown • No knowledge about increased accidents Foreseeable failure application has been considered, no increased risk determined for this kind of products.	N/A
	No HAZARDS arising from settings not intended and not described in the instructions		N/A

IEC 61010-1			
Clause	Requirement + Test	Result - Remark	Verdict
	Other cases of REASONABLY FORESEEABLE MISUSE addressed by RISK assessment		N/A
16.2	Ergonomic aspects		N/A
	Factors giving rise to a HAZARD the RISK assessment is reflecting those aspects:		N/A
	a) limitation of body dimensions		N/A
	b) displays and indicators		N/A
	c) accessibility and conventions of controls		N/A
	d) arrangement of TERMINALS		N/A
17	RISK assessment	All Risks are covered in Point 6-16	N/A
	RISK assessment conducted, if HAZARD might arise and not covered by Clauses 6 to 16		N/A
	TOLERABLE RISK achieved by iterative documented process covering the following:		N/A
	a) RISK analysis		N/A
	Identifies HAZARDS and estimates RISK		N/A
	b) RISK evaluation		N/A
	Plan to judge acceptability of resulting RISK level based on the estimated severity and likelihood of a RISK		N/A
	c) RISK reduction		N/A
	Initial RISK reduced by counter measures;		N/A
	Repeated RISK evaluation without new RISKS introduced		N/A
	RISKS remaining after RISK assessment addressed in instructions to RESPONSIBLE BODY:		N/A
	Information contained how to mitigate these RISKS		N/A
	Following principles in methods of RISK reduction applied by manufacturer in given order:		N/A
	1) RISKS eliminated or reduced as far as possible		N/A
	2) Protective measures taken for RISKS that cannot be eliminated		N/A
	3) User information about residual RISK due to any defect of the protective measures		N/A
	Indication of particular training is required		N/A
	Specification of the need for personal protective equipment		N/A
	Conformity checked by evaluation of the RISK assessment documentation		N/A

IEC 61010-1			
Clause	Requirement + Test	Result - Remark	Verdict

ANNEX F	ROUTINE TESTS		N/A
	Manufacturer ´s declaration		N/A

IEC 61010-1			
Clause	Requirement — Test	Result — Remark	Verdict

4.4.2	**TABLE: Summary of SINGLE FAULT CONDITIONS**			**Form A.1**	P
Subclause	Title	Does not apply	Carried out	Comments	
4.4.2.1	SINGLE FAULT CONDITIONS not covered by 4.4.2.2 to 4.4.2.14		X	see Form A.2	
4.4.2.2	PROTECTIVE IMPEDANCE	X			
4.4.2.3	PROTECTIVE CONDUCTOR		X	see Form A.8	
4.4.2.4	Equipment or parts for short-term or intermittent operation				
4.4.2.5	Motors	X			
	– stopped while fully energized	X			
	– prevented from starting	X			
	– one phase interrupted (multi-phase)	X			
4.4.2.6	Capacitors		X	No hazard	
4.4.2.7	MAINS transformers Attach drawing of MAINS transformers showing all protective devices (see Forms A.30 and A.31)	X			
4.4.2.8	Outputs	X		No outputs. The inverter terminals are input from inverter to short circuit box.	
4.4.2.9	Equipment for more than one supply	X			
4.4.2.10	Cooling – air holes closed – fans stopped – coolant stopped – loss of cooling liquid	X X X X X			
4.4.2.11	Heating devices – timer overridden – temperature controller overridden	X X X			
4.4.2.12	Insulation between circuits and parts	X			
4.4.2.13	Interlocks	X			
4.4.2.14	Voltage selectors	X			
List below all SINGLE FAULT CONDITIONS not covered by 4.4.2.2 to 4.4.2.14:					
Supplementary information: (see Form A.2 for details of tests)					

IEC 61010-1			
Clause	Requirement — Test	Result — Remark	Verdict

4.4	TABLE: Testing in SINGLE FAULT CONDITION – Results			Form A.2	P
Test subclause	Fault No.	Fault description	Td 4.4.3 (NOTE)	How was test terminated Comments	Meets 4.4.4
4.4.2.6	s.c.	Short circuits capacitor C9	1 h	No hazard. If the short circuit box mounted in the correct way the building circuit breaker between input voltages (DC) to short circuit box opened.	--
4.4.2.6	s.c.	Short circuits capacitor C8	1 h	No hazard. If the short circuit box mounted in the correct way the building circuit breaker between input voltages (DC) to short circuit box opened.	--
4.4.	s.c	Short circuit Diode D1	1 h	No hazard. If the short circuit box mounted in the correct way the building circuit breaker between input voltages (DC) to short circuit box opened.	-

NOTE Td = Test duration in hh:mm:ss
Record dielectric strength test on Form A.14 and temperature tests on Form A.21.
Record in the comments column for each test whether carried out during or after SINGLE FAULT CONDITION.

Supplementary information:

IEC 61010-1			
Clause	Requirement — Test	Result — Remark	Verdict

5.1.3c)	**TABLE: MAINS supply**		**Form A.3**	P
	Marked rating ..... :	Kurzschlussbox = 800 DC Fernschalter = 15 DC	V	—
	Phase ..... :	--		—
	Frequency ..... :	D.C.	Hz	—
	Current ..... :	Kurzschlussbox = max. 10 Fernschalter = 0,001	A	—
	Power ..... :	--	W	—
	Power ..... :	--	VA	—

Test No.	Voltage V	Frequency Hz	Current A	Power in W	Power in VA	Comments
Fernschalter						
1	4,5 V DC	--	0,001	--	--	In operation
2	5,0 V DC	--	0,001	--	--	In operation
3	5,5V DC	--	0,001	--	--	In operation
Kurzschlussbox						
4	720 DC	--	0,1	--	--	Stand by (no inverter load)
5	800 DC	--	0,09	--	--	Stand by (no inverter load)
6	880 DC	--	0,09	--	--	Stand by (no inverter load)
7	420 DC	--	10,4	--	--	In operation (max. inverter load=10A)
8	800 DC	--	10A	--	--	In operation (max. inverter load=10A)
9	880 DC	--	9,8	--	--	In operation (max. inverter load=10A)

Note – Measurements are only required for marked ratings.

Supplementary information:

IEC 61010-1			
Clause	Requirement — Test	Result — Remark	Verdict

5.3	TABLE: Durability of markings	Form A.4	P

Marking method (see NOTE)	Agent
1) Adhesive label	A Water
2) Ink printed	B Isopropyl alcohol 70%
3) Laser marked	C (specify agent)
4) Filmcoated (plastic foil control panel)	D (specify agent)
5) Imprinted on plastic (moulded in)	E (specify agent)

NOTE – Where applicable include print method, label material, ink or paint type, fixing method, adhesive and surface to which marking is fixed.

Marking location	Marking method (see above)
Identification (5.1.2)	P
MAINS supply (5.1.3)	N/A
Fuses (5.1.4)	N/A
terminals and operating devices (5.1.5.2)	P
Switches and circuit breakers (5.1.6)	N/A
Double/reinforced equipment (5.1.7)	N/A
Field wiring Terminal boxes (5.1.8)	N/A
Warning marking (5.2)	N/A
Battery charging (13.2.2)	N/A

Method	Test agent	Remains legible	Label loose	Curled edges	Comments
		Verdict	Verdict	Verdict	
1	A	Pass	Pass	Pass	Identification (5.1.2)
1	A	Pass	Pass	Pass	Identification (5.1.2)
1	A	Pass	Pass	Pass	terminals and operating devices (5.1.5.2)
1	B	Pass	Pass	Pass	Identification (5.1.2)
1	B	Pass	Pass	Pass	Identification (5.1.2)
1	B	Pass	Pass	Pass	terminals and operating devices (5.1.5.2)

Supplementary information:

IEC 61010-1			
Clause	Requirement — Test	Result — Remark	Verdict

6	TABLE: Protection against electric shock - Block diagram of system Form A.5	P

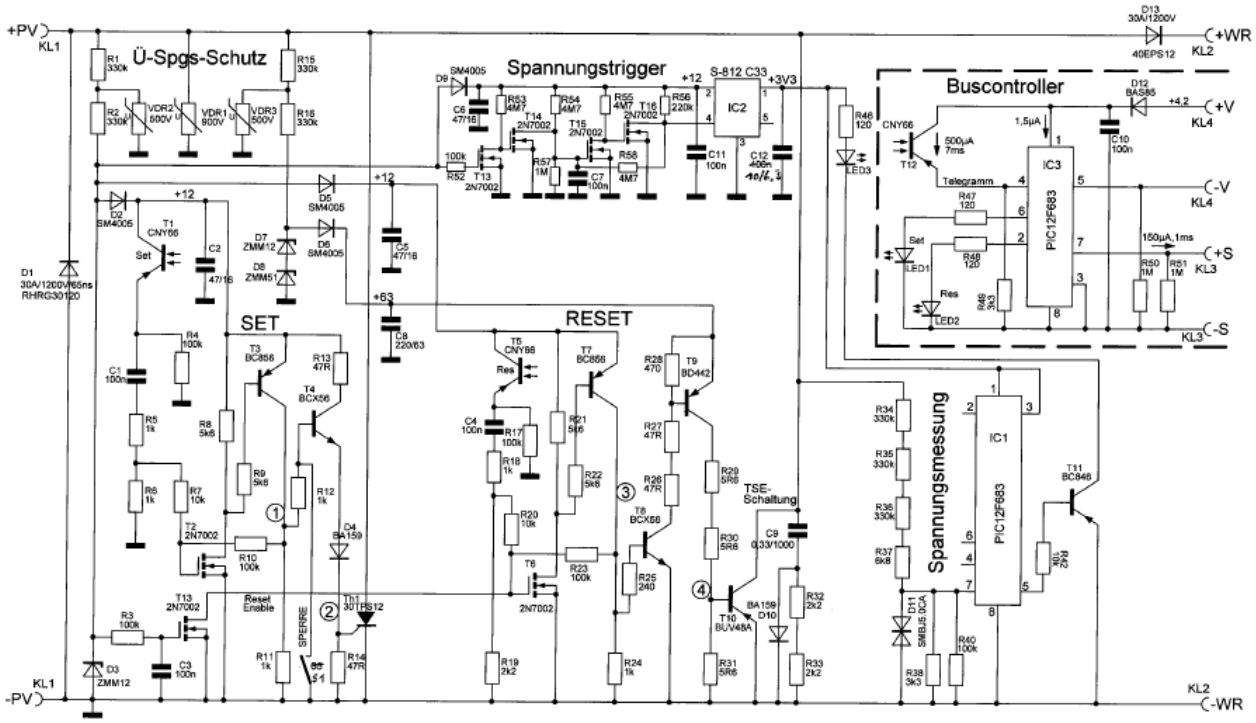

Pollution degree ..... : 2	Overvoltage category ..... : III

Location or description	Insulation type (NOTE 1)	Maximum working voltage (NOTE 2)	CREEPAGE Distance (NOTE 3)				CLEARANCE (NOTE 3)	Test voltage (NOTE 2)	Comments
			PWB mm	CTI	Other mm	CTI	mm	V	
Enclosure to active parts	BI	800V DC	--	--	8,0	--	8,0	4460 (rms)	--
Active parts to SELV parts	DI	800V DC	16,0	>475	--	--	16,00	7400 (rms)	--

NOTE 1 – Type of insulation:
BI = BASIC INSULATION
DI = DOUBLE INSULATION
PI = PROTECTIVE IMPEDANCE
RI = Reinforced INSULATION
SI = Supplementary INSULATION

NOTE 2 - Types of voltage
Peak impulse test voltage (pulse)
r.m.s.
d.c.
peak

NOTE 3 - INSTALLATION CATEGORIES (OVERVOLTAGE CATEGORIES) or POLLUTION DEGREES which differ from these should be shown under "Comments".

Supplementary Information:

IEC 61010-1			
Clause	Requirement — Test	Result — Remark	Verdict

6.2	**TABLE: List of ACCESSIBLE parts**		**Form A.6**	P
6.1.2	Exceptions			—
6.2	Determination of ACCESSIBLE parts			—
Item	Description	Determination method (NOTE 5)	Exception under 6.1.2 (NOTE 4)	

NOTE 1 – Test fingers and pins are to be applied without force unless a force is specified (see 6.2.2)
NOTE 2 – Special consideration should be given to inadequate insulation and high voltage parts (see 6.2)
NOTE 3 – Parts are considered to be ACCESSIBLE if they could be touched in the absence of any covering which is not considered to provide suitable insulation (see 6.4).
NOTE 4 – Capacitor test may be required (see Form A.7).
NOTE 5 – The determination methods are:
V = visual; R = rigid test finger; J = jointed test finger; P3 = pin 3 mm diameter; P4 = pin 4 mm diameter.

Supplementary information:

No openings, where the test pin can touch hazardous live parts.

IEC 61010-1			
Clause	Requirement — Test	Result — Remark	Verdict

6	**TABLE: Values in NORMAL CONDITION**	**Form A.7**	P
6.1.2	Exceptions	11.2 Cleaning and decontamination	—
6.3.1	Values in NORMAL CONDITION (see NOTE 1)	11.3 Spillage	—
6.6.2	Terminals for external circuit	11.4 Overflow	—
6.10.3	Plugs and connections		—

Item	Voltage			Current				Capacitance		10 s / 5 s test (NOTE)			Comments
(see Form A.6)	V r.m.s.	V peak	V d.c.	Test circuit A1/A2/A3	mA r.m.s.	mA peak	mA d.c.	µC	mJ	V	µC	mJ	
Input Voltage Kurz-schlussbox	--	--	800	--	--	--	--	--	--	--	--	--	No outputs
Input Voltage Fern-schalter	--	--	5	--	--	--	--	--	--	--	--	--	No outputs

NOTE – A 10 s test is specified in 6.1.2 a) b). A 5 s test is specified in 6.10.3. The capacitance level versus voltage below the limits given from figure 3 of IEC 61010-1.

Supplementary information:

IEC 61010-1			
Clause	Requirement — Test	Result — Remark	Verdict

6.3.2	TABLE: Values in SINGLE FAULT CONDITION											Form A.8	P
Item	Subclause and	Voltage			Transient (see NOTE)		Current				Capacitance		
(see Form A.6)	fault No. (see Form A.2)	V r.m.s.	V peak	V d.c.	V	s	Test circuit A1/A2/A3	mA r.m.s.	mA peak	mA d.c.	µF (see NOTE)	Comments	
Input Voltage Kurz-schlussbox	Phase + to PE	--	--	800	--	--	A1	--	--	1,23	--		
Input Voltage Kurz-schlussbox	Phase - to PE	--	--	800	--	--	A1	--	--	1,03	--		
Input Voltage Fern-schalter	Phase + to PE	--	--	5	--	--	A1	--	--	0,23	--		
Input Voltage Fern-schalter	Phase - to PE	--	--	5	--	--	A1	--	--	0,23	--		
NOTE – Transient voltages must be below the limits given from Figure 2 and the capacitance below the limits from figure 3 of IEC 61010-1.													
Supplementary information:													

IEC 61010-1			
Clause	Requirement — Test	Result — Remark	Verdict

6.5.2.2	TABLE: Cross-sectional area of bonding conductors Form A.9	P
CONDUCTOR LOCATION	CROSS-SECTIONAL AREA mm²	VERDICT
Short circuit box: PE crimp crimping from housing to cover	1,5	P

6.5.2.3	TABLE: Tighting torque test		P
Conductor location	Size of screw	Tighting torque Nm	Verdict
Short circuit box: PE crimp crimping from housing to cover	M4	1,2	P
Supplementary information:			

6.5.2.4	TABLE: Bonding impedance of plug connected equipment Form A.10			N/A
ACCESSIBLE part under test	Test current A	Voltage attained after 1 min V (NOTE 2)	Calculated resistance (Maximum 0,1 or 0,2 Ω) Ω (NOTE 1)	Verdict
NOTE 1 – For none-detachable power cord the impedance between protective conductor plug pin of MAINS cord and each ACCESSIBLE part shall not exceed 0,2 Ohm.				
Supplementary information:				

6.5.2.5	TABLE: Bonding impedance of permanently connected equipment		P
ACCESSIBLE part under test	Test current A	Voltage attained after 1 min (maximum 10 V) V	Verdict
Housing outside	25A	8	P
Cover outside	25A	8	P
Supplementary information:			

IEC 61010-1			
Clause	Requirement — Test	Result — Remark	Verdict

6.5.2.6	TABLE: Transformer PROTECIVE BONDING screen Form A.11			N/A
ACCESSIBLE part under test	Test current (see NOTE) A	Voltage attained after 1 min (maximum 10 V) V	Calculated resistance (maximum 0,1 Ω) Ω	Verdict
NOTE – Test current must be twice the value of the overcurrent protection means of the winding. Test is specified in 6.5.2.6 a) or b).				

Supplementary information:
No transformer

IEC 61010-1			
Clause	Requirement — Test	Result — Remark	Verdict

6.5.4	TABLE: protective impedance	Form A.12	N/A

A single component

Component	Location	Measured		Calculated	Rated		Verdict	Comments
		Working voltage V	Current A	Power dissipation W	Working voltage V	Power dissipation W		

A combination of components

Component	Location	Comments

NOTE – A PROTECTIVE IMPEDANCE shall not be a single electronic device that employs electron conduction in a vacuum, gas or semiconductor.

Supplementary information:

6.5.6	TABLE: Current- or voltage-limiting device	N/A

Component	Location	Measured		Rated		Verdict	Comments
		Working voltage V	Current A	Working voltage V	Current A		

Supplementary information:

IEC 61010-1			
Clause	Requirement — Test	Result — Remark	Verdict

6.7	**TABLE: CLEARANCES and CREEPAGE distances**		**Form A.13**	P
6.4.2	ENCLOSURES and protective barriers	8	Mechanical resistance to shock and impact	—
6.4.4	Impedance	9.6.1	Overcurrent protection basic insulation between MAINS parts	—
6.5.4	Protective impedance	10.5.1	Integrity of CLEARANCES and CREEPAGE distances	—
6.5.6	Current- or voltage-limiting device			—

Location (see Form A.5)	Measured (initial – 6.7)		Verdict	Mechanical tests (note)					Test at max.	Measured after test (if required)		Verdict	Comments
	CREEPAGE DISTANCE	CLEARANCE		Applied force	Rigidity (8.2)		Drop (8.3)		RATED ambient	CREEPAGE DISTANCE	CLEARANCE		
	mm	mm		N	Static (8.2.1)	Impact (8.2.2)	Normal (8.3.1)	Hand-held/ Plug-in	(10.5.1)	mm	mm		
Enclosure to active parts	8,0	8,0	P	30 / 5	P	P	--	--	40℃	8,0	8,0	P	
Active parts to SELV parts	16	16	P	30 / 5	P	P	--	--	40℃	16	16	P	

NOTE – Refer to Form A.14 for dielectric strength tests following the above tests.

Supplementary information:

IEC 61010-1			
Clause	Requirement — Test	Result — Remark	Verdict

6.8	**TABLE: Dielectric strength tests** **Form A.14**	P
4.4.4.1 b)	Conformity after application of SINGLE FAULT CONDITIONS[1]	P
6.4	Primary means of protection[2]	P
6.6	Connections to external circuits	N/A
6.7.	Insulation requirements[2] (see Annex K)	P
6.10.2	Fitting of non-detachable MAINS supply cords[1]	N/A
9.2 a) 2)	Eliminating or reducing the sources of ignition within the equipment	P
9.4 c)	Limited-energy circuit	N/A
9.6.1	Overcurrent protection basic insulation between MAINS - parts	N/A

[1] Record the fault, test or treatment applied before the dielectric strength test. [2] Humidity preconditioning required.

	Test site altitude..... :	500m	—
	Test voltage correction factor (see Table 10) ..... :	1,12	—

Location or references from Forms A.2 and A.5	Clause or sub-clause	Humidity Yes/No	Working voltage V	Test voltage r.m.s./peak/d.cV	Comments	Verdict
Enclosure to active parts	--	No	800 DC	4460 (rms)	No Breakdown, but a creepage current from 0,6mA was measured.	P
Active parts to SELV parts only PCB	--	No	800 DC	7400 (rms)	No Breakdown	P
Active parts to SELV parts PCB built in device.	--	No	800 DC	7400 (rms)	No Breakdown	P

Supplementary information:

IEC 61010-1			
Clause	Requirement — Test	Result — Remark	Verdict

6.10.2	TABLE: Cord anchorage					Form A.15	P
Location	Mass kg	Pull N	Verdict	Torque Nm	Verdict	Comment	
short circuit box: Cable gland	1	30	P	0,10	P		
Remote switch: Cable gland	<1	30	P	0,10	P		
Dielectric strength test for 1 min. (6.8.3.1) .....:			4460		V r.m.s.		

Supplementary information:

Approved cable gland used.

IEC 61010-1			
Clause	Requirement — Test	Result — Remark	Verdict

7.	**TABLE: Protection against mechanical HAZARDS**	**Form A.16**	N/A
7.3.4	Limitation of force and pressure		—
7.3.5	Gap limitations between moving parts		—

	Clause 7.3.4		Clause 7.3.5.1								Clause 7.3.5.2				
	Continuous	Temporary	Minimum gaps (mm)								Maximum gaps (mm)				
Part / Location	Contact présure max. 50 N /cm² @ max. 150 N	max. 250 N / 3 cm² @ max. 0,75 s	Torso 500	Head 300	Leg 180	Foot 120	Toes 50	Arm 120	Hand 100	Finger 25	Head 120	Foot 35	Finger 4	Verdict	Comments

Supplementary information:

No such hazards.

IEC 61010-1			
Clause	Requirement — Test	Result — Remark	Verdict

9	**TABLE: Protection against the spread of fire**			**Form A.17**	P
Item	Source of HAZARD or area of the equipment considered (circuit, component, liquid etc.)	Protection Method (9a, 9b or 9c)	Protection details		Verdict
short circuit box	Electronic parts in the enclosure	9a	Conform to the requirements of the single fault conditions.		P
Remote switch	Electronic parts in the enclosure	9a	Conform to the requirements of the single fault conditions.		P
short circuit box	Electrical part inside the enclosure	9 c	The requirements of fire enclosure are fulfilled when the device is mounted in the correct way.		P
Remote switch	Electrical part inside the enclosure	9 c	The requirements of fire enclosure are fulfilled when the device is mounted in the correct way.		P
Supplementary information:					

IEC 61010-1			
Clause	Requirement — Test	Result — Remark	Verdict

9.3.2	**TABLE: Constructional requirements**	**Form A.18**	P
14.7	Printed circuit boards	Approved component.	P

Material tested.....:		—
Generic name.....:		—
Material manufacturer .....:		—
Type.....:		—
Colour.....:		—
Conditioning details .....:		—

		Sample 1	Sample 2	Sample 3
Thickness of specimen	mm			
Duration of flaming after first Application	s			
Duration of flaming plus glowing After second application	s			
Specimen burns to holding clamp	Yes/No			
Cotton ignited	Yes/No			
Sample result	Pass/Fail			

Supplementary information:

Not necessary, because metal and approved plastic enclosure used.

IEC 61010-1			
Clause	Requirement — Test	Result — Remark	Verdict

9.4	TABLE: Limited-energy circuit						Form A.19	N/A
Item		9.4 a)	9.4 b) Current and power limitation			9.4 c)	Decision	
or Location (see Form A.17)		Maximum potential in circuit voltage r.m.s./d.c. V	Maximum available current A	Maximum available power VA	Overload protection after 120 s A	Circuit separation	Yes/No	Comments
Supplementary information:								

9.5	TABLE: Requirements for equipment containing or using flammable liquids	Form A.20	N/A
Type of liquid	9.5 Flammable liquids		Verdict
	b) Quantity	c) Containment	
Supplementary information: No such flammable liquids in the device.			

IEC 61010-1			
Clause	Requirement — Test	Result — Remark	Verdict

10.	**TABLE : Temperature Measurements** **Form A.21A**	P
10.1	Surface temperature limits - NORMAL CONDITION and / or SINGLE FAULT CONDITION	P
10.2	Temperature of windings- NORMAL CONDITION and / or SINGLE FAULT CONDITION	P
10.3	Other temperature measurements	P

Operating conditions:	Stand by		
Frequency.....:	-- Hz	Test room ambient temperature (ta) .....:	25 °C
Voltage .....:	800 V	Test duration.....:	3 h 30 min

Part / Location	t_m °C	t_c °C	t_{max} °C	Verdict	Comments
Short circuit box:					
Enclosure hottest spot	33,6	48,6	55	P	Stand by
PCB hottest spot	45,7	60,2	125	P	Stand by
Optocoupler LED 2 /T5	38,1	53,1	85	P	Stand by
Capacitor C8	43,5	58,5	85	P	Stand by
Capacitor C9	47,4	62,4	85	P	Stand by
Varistor VDR1	63,1	78,1	85	P	Stand by
Varistor VDR2	58,2	73,2	85	P	Stand by
Terminal KL1	42,3	57,3	105	P	Stand by
Terminal KL2	39,4	54,4	105	P	Stand by
Transistor Th1	43,6	58,6	--	P	Stand by
Diode D1	43,4	58,4	--	P	Stand by
Remote switch:					
Enclosure hottest spot	26,4	41,4	70	P	Stand by
PCB hottest spot	27,1	42,1	125	P	Stand by
Switch S1	26,0	41,0	60	P	Stand by
Display	25,3	40,3	--	P	Stand by

NOTE 1 - t_m = measured temperature
t_c = t_m corrected (t_m–t_a+ **40 °C** or max. RATED ambient)
t_{max} = maximum permitted temperature
NOTE 2 - see also 14.1 with reference to component operating conditions
NOTE 3 - Record values for NORMAL CONDITION and / or SINGLE FAULT CONDITION in this Form use additional form if necessary
NOTE 4 - see Form A.21B for details of winding temperature measurements

Supplementary information:

Based of that the transistor has an operation voltage from max. 800V the heating test was done with the max input voltage of 800V DC.

10.	**TABLE : Temperature Measurements** **Form A.21A**	P
10.1	Surface temperature limits - NORMAL CONDITION and / or SINGLE FAULT CONDITION	P
10.2	Temperature of windings- NORMAL CONDITION and / or SINGLE FAULT CONDITION	P
10.3	Other temperature measurements	P

Operating conditions:	In operation (short circuit)		
Frequency.....:	-- Hz	Test room ambient temperature (ta) .....:	25 °C
Voltage .....:	800 V	Test duration.....:	4 h 00 min

Part / Location	t_m °C	t_c °C	t_{max} °C	Verdict	Comments
Short circuit box:					
Enclosure hottest spot	40,0	55,0	55	P	In operation
PCB hottest spot	48,1	63,1	125	P	In operation
Optocoupler LED 2 /T5	36,4	51,4	85	P	In operation
Capacitor C8	48,3	63,3	85	P	In operation
Capacitor C9	41,3	56,3	85	P	In operation
Varistor VDR1	57,6	73,6	85	P	In operation
Varistor VDR2	58,4	73,4	85	P	In operation
Terminal KL1	50,7	65,7	105	P	In operation
Terminal KL2	51,0	66,0	105	P	In operation
Transistor Th1	48,8	63,8	--	P	In operation
Diode D1	63,4	78,4	--	P	In operation
Remote switch:					
Enclosure hottest spot	26,4	41,4	70	P	In operation
PCB hottest spot	27,1	42,1	125	P	In operation
Switch S1	26,0	41,0	60	P	In operation
Display	25,3	40,3	--	P	In operation

NOTE 1 - t_m = measured temperature
t_c = t_m corrected (t_m–t_a+ **40 °C** or max. RATED ambient)
t_{max} = maximum permitted temperature
NOTE 2 - see also 14.1 with reference to component operating conditions
NOTE 3 - Record values for NORMAL CONDITION and / or SINGLE FAULT CONDITION in this Form use additional form if necessary
NOTE 4 - see Form A.21B for details of winding temperature measurements

Supplementary information:

Based of that the transistor has an operation voltage from max. 800V the heating test was done with the max input voltage of 800V DC.

IEC 61010-1			
Clause	Requirement — Test	Result — Remark	Verdict

10.2	**TABLE: Temperature of windings** **Form A.21B** **Resistance method Temperature Measurements**	N/A
4.4.2.7	MAINS transformers	N/A
14.2.1	Motor temperatures	N/A

Operating conditions ....:	--		
Frequency.....:	Hz	Test room ambient temperature (ta1/ta2) ..... :	/ °C (initial / final)
Voltage .....:	V	Test duration ..... :	h min

Part / Designation	Rcold Ω	Rwarm Ω	Current A	tr K	tc °C	tmax °C	Verdict	Comments

NOTE 1- R_{cold} = initial resistance R_{warm} = final resistance
t_r = temperature rise t_c = t_r corrected (t_c= t_r - { t_{a2} - t_{a1}} + [40 °C or max RATED ambient])
t_{max} = maximum permitted temperature
NOTE 2 - Indicate insulation class (IEC 60085) under comments (optional)
NOTE 3 - Record values for NORMAL CONDITION and / or SINGLE FAULT CONDITION in this Form use additional form if necessary

Supplementary information:

No motor available.

IEC 61010-1			
Clause	Requirement — Test	Result — Remark	Verdict

10.5.2	**TABLE: Resistance to heat of non-metallic ENCLOSURES**	**Form A.22**	N/A
	Test method used ..... :		—
	Non operative treatment ..... :	[ ]	
	Empty ENCLOSURE..... :	[ ]	
	Operative treatment ..... :	[ ]	
	Temperature during tests..... :		—
	ENCLOSURE samples tested were ..... :		—

Description	Material	Comments	Verdict

	Dielectric strength test (6.8)……:		V	r.m.s./peak/d.c.	

NOTE – Within 10 minutes of the end of treatment suitable tests in acc. to 8.2 and 8.3 must be conducted and pass criteria of 8.1.

Supplementary information:

Approved material used.

IEC 61010-1			
Clause	Requirement — Test	Result — Remark	Verdict

10.5.3	**TABLE: Insulating Materials**	**Form A.23**	P
10.5.3 1)	Ballpressure test	Only remote switch	P
	Max. allowed impression diameter ..... :	2 mm	—

Part	Test temperature ℃	Impression Diameter (mm)	Verdict
Enclosure remote switch	70	1,06	P

Supplementary information:

Approved material used.

10.5.3 2)	Vicat softening test (ISO 306)	N/A

Part	Vicat softening temperature ℃	Thickness of sample (mm)	Verdict

Supplementary information:

IEC 61010-1			
Clause	Requirement — Test	Result — Remark	Verdict
8	**TABLE: Mechanical resistance to shock and impact**	**Form A.24**	P
11	**Protection against HAZARDS from fluids**		N/A

Voltage tests can be carried out once after performing the tests of clause **8** and clause **11**. However, if voltage tests are carried out separately after each set of tests, two forms can be used.

	Clause 8 tests				Clause 11 tests							
Location (see form A.5)	Static (8.2.1) 30 N	Impact (8.2.2)	Normal (8.3.1)	Handheld Plug-in	Cleaning (11.2)	Spillage (11.3)	Overflow (11.4)	IEC 60529 (11.6)	Working voltage V	Test voltage V	Verdict	Comments
short circuit box:	30	P	P	--	P	--	--	--	800 DC	4460	P	No breakdown
Remote switch:	30	P	P	--	P	--	--	--	15 DC	500	P	No breakdown

NOTE – Use r.m.s., d.c. or peak to indicate the used test voltage.

Supplementary information:

IEC 61010-1			
Clause	Requirement — Test	Result — Remark	Verdict

11.7.2	TABLE: Leakage and rupture at high pressure	Form A.25	N/A

Part	Maximum permissible working pressure Mpa	Test pressure MPa	Leakage Yes / No	Deformation Yes / No	Burst Yes / No	Comments

NOTE – see also Annex G with requirements for USA and Canada.

Supplementary information:

No high pressure available.

11.7.3	Leakage from low-pressure parts	N/A

Part	Test pressure Mpa	Leakage Yes / No	Comments

Supplementary information:

No low- pressure available.

IEC 61010-1			
Clause	Requirement — Test	Result — Remark	Verdict

12.2.1	**TABLE: Ionizing radiation**		**Form A 26**	N/A
12.2.1.2	Equipment intended to emit radiation			
Locations tested	Measured values µSv/h	Verdict	Comments	
Supplementary information: No ionizing radiation available.				
12.2.1.3	Equipment not intended to emit radiation			N/A
	Max. allowed effective dose rate at 100 mm……: 1 µSv/h			—
Locations tested	Measured values µSv/h	Verdict	Comments	
Supplementary information: No emit radiation available.				

IEC 61010-1			
Clause	Requirement — Test	Result — Remark	Verdict

12.5.1	**TABLE: Sound level**	**Form A.27**	N/A
Locations tested	Measured values dBA	Calculated maximum sound pressure level	
At operator's normal position and at bystanders' positions			
a)			
b)			
c)			
d)			
e)			
f)			
Supplementary information: No sound level in use			

12.5.2	Ultrasonic pressure		N/A
Locations tested	Measured values		Comments
	dB	kHz	
At operator's normal position			
At 1 m from the ENCLOSURE			
a)			
b)			
c)			
d)			
e)			
NOTE – No limit is specified at present, but a limit of 110 dB above the reference pressure value of 20 µPa is under consideration for applicable frequencies between 20 kHz and 100 kHz.			
Supplementary information: No Ultrasonic pressure available.			

IEC 61010-1			
Clause	Requirement — Test	Result — Remark	Verdict

13.2.2	**TABLE: Batteries**	**Form A.28**	N/A
	Battery load and charging circuit diagram:		
	Battery type ..... :		—
	Battery manufacturer/model/catalogue No. ..... :		—
	Battery ratings ..... :		—
	Reverse polarity instalment test		

Single component failures	Verdict	
Component	Open circuit	Short circuit

Supplementary information:

No batteries available.

IEC 61010-1			
Clause	Requirement — Test	Result — Remark	Verdict

14.3	TABLE: Overtemperature protection devices	Form A.29	N/A

Reliability test			
Component	Type (NOTE)	Verdict	Comments

NOTE:
NSR = non-self-resetting (10 times)
NR = non-resetting (1 time)
SR = self-resetting (200 times)

Supplementary information:

No overtemperature protection devices available.

IEC 61010-1			
Clause	Requirement — Test	Result — Remark	Verdict

4.4.2.7	**TABLE: MAINS transformer**	**Form A.30**	N/A
4.4.2.7.2	Short circuit		N/A
14.6	MAINS transformers tested outside equipment		N/A
Type..... :			—
Manufacturer ..... :			—
Test in equipment			N/A
Test on bench			N/A
Test repeated inside equipment (see 14.6)			N/A
Optional – Insulation class (IEC 60085) of the lowest rated winding :			—

Winding identification				
Type of Protector for winding (Note 1)				
Elapsed time				
Current, A primary				
secondary				
Winding temperature, °C primary				
(see Note 2) secondary				
Tissue paper / cheesecloth OK ? (Pass / Fail)				
Voltage tests (see Note 3)				
Primary to secondary _____ V ____				
Primary to core _____ V ____				
Secondary to secondary _____ V ____				
Secondary to core _____ V ____				
Verdict				

Note 1: Primary fuse - PF / ( ) A
Secondary fuse - SF / ( ) A
Overtemperature protection - OP / ( ) °C
Impedance protection - Z
Note 2: Indicate method of measurement TC = with thermocouple
R = resistance method
If resistance method is used, record resistance in cold and warm condition in FormA.20B!
Note 3: Record the voltage applied and the type of voltage (r.m.s. / d.c. / peak) and for results use NB = no breakdown or B = breakdown

Supplementary information:

No mains transformer available.

IEC 61010-1			
Clause	Requirement — Test	Result — Remark	Verdict

4.4.2.7	**TABLE: MAINS transformer**	**Form A.31**	N/A
4.4.2.7.3	Overload tests (for MAINS transformers)		N/A
14.6	MAINS transformers tested outside equipment		N/A
Type.....:			—
Manufacturer .....:			—
Test in equipment			N/A
Test on bench			N/A
Test repeated inside equipment (see 14.6)			N/A
Optional – Insulation class (IEC 60085) of the lowest rated winding :			—

Winding identification				
Type of Protector for winding (Note 1)				
Elapsed time				
Current, A primary				
secondary				
Winding temperature, °C primary				
(see Note 2) secondary				
Tissue paper / cheesecloth OK ? (Pass / Fail)				
Voltage tests (see Note 3)				
Primary to secondary _____ V ____				
Primary to core _____ V ____				
Secondary to secondary _____ V ____				
Secondary to core _____ V ____				
Verdict				

Note 1: Primary fuse - PF / ( ) A
Secondary fuse - SF / ( ) A
Overtemperature protection - OP / ( ) °C
Impedance protection - Z
Note 2: Indicate method of measurement TC = with thermocouple
R = resistance method
If resistance method is used, record resistance in cold and warm condition in FormA.20B!
Note 3: Record the voltage applied and the type of voltage (r.m.s. / d.c. / peak) and for results use NB = no breakdown or B = breakdown

Supplementary information:

No mains transformer available.

IEC 61010-1			
Clause	Requirement — Test	Result — Remark	Verdict

14.8	TABLE: Transient overvoltage limiting devices	Form A.32	N/A

Component / Designation	Overvoltage Category	MAINS voltage V rms	Test voltage V	t_m °C	t_c °C	t_{max} °C	Rupture Yes / No	Circuit breaker tripped	Verdict	Comments

Test room ambient temperature ….: ℃

NOTE - t_m = measured temperature
t_c = t_m corrected (t_m–t_a+ **40 °C** or max. RATED ambient)
t_{max} = maximum permitted temperature
Conformity is checked by applying 5 positive and 5 negative impulses with the applicable impulse withstand voltage, spaced up to 1 min apart, from a hybrid impulse generator (see IEC 61180-1).

Supplementary information:
Approved components used.