2. PRESENTATION

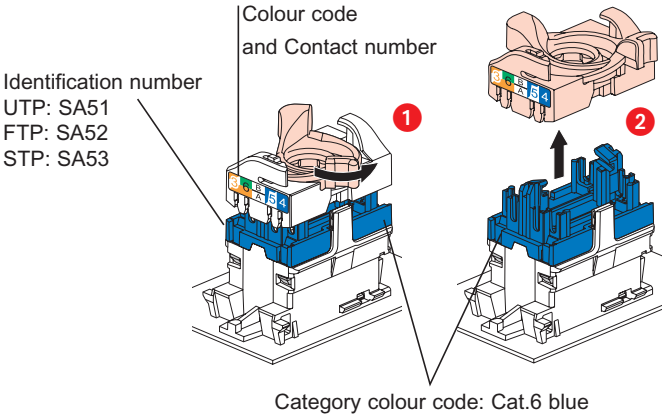

Category colour code: Cat.6 blue

3. INSTALLATION

The mechanisms can be surface mounted or flush mounted.

They can also be mounted in Mosaic Programme trunkings, columns, floor boxes and office modules (min. depth 40 mm)

For Cat. Nos. 765 44/46, mounting in trunking only.

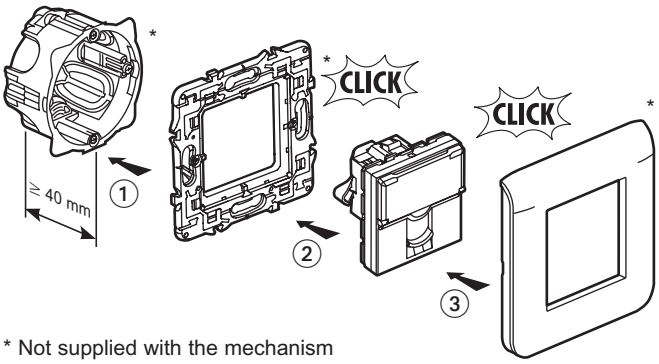

* Not supplied with the mechanism

Rail mounting is possible using adaptor Cat. No. 802 99 (2 modules).

The mechanisms can be mounted on thin panels with adaptors.

Cat. No. 802 90 (1 modules), Cat. No. 802 91 (2 modules).

Cat. No. 802 92 (2 x 1 vertical module).

Cat. No. 765 94/95
Unlocking

4. TECHNICAL CHARACTERISTICS

4.1 Material characteristics

Contacts: gold/nickel, minimum thickness of gold > 0.8 µm
Metal parts: bronze, nickel, platinum, gold
PBT polycarbonate
For STP products the body and the spreader are made of metal alloy with a copper-nickel coating.

4.2 Electrical characteristics

Breakdown voltage ≥ 1000 V
Contact resistance ≤ 20 mΩ
Insulation resistance ≥ 500 MΩ at 100 V DC
Connector tested and guaranteed under PoE restrictions, IEEE 802.3af standard and PoE+, draft standard 802.3at, up to 2500 on-load connections / disconnections.

Tests are carried out with 2 simultaneous PoE+ circuits for a minimum total power of 50 W.

4.3 Mechanical characteristics

Max. number of connections and disconnections: 5 without refreshing the wiring.
Endurance: 2500 movements (plug insertion/withdrawal).
IK03

4.4 Climatic characteristics

Températures d'utilisation : - 40° C to + 70° C
Humid heat cycle 21 days

5. CONNECTION

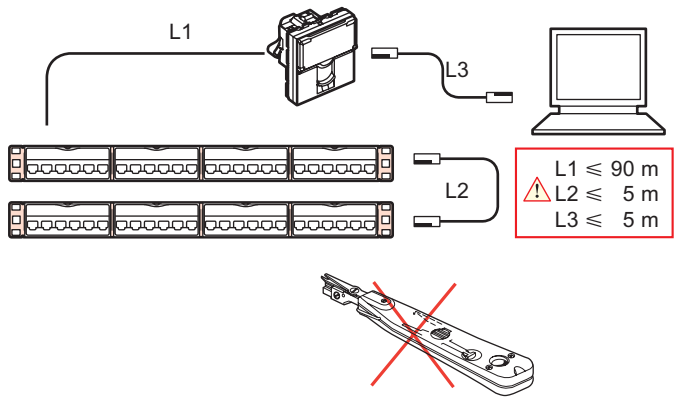

6. OVERALL DIMENSIONS

Front view:

765 22/23/64/65/66/91/92/93/94/95
794 64/65/91/92

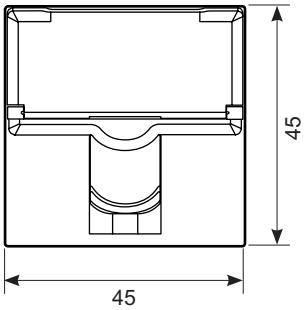

765 61/62/63/81/82/83
794 61/62

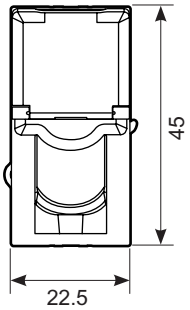

6. OVERALL DIMENSIONS *(cont.)*

765 44/46

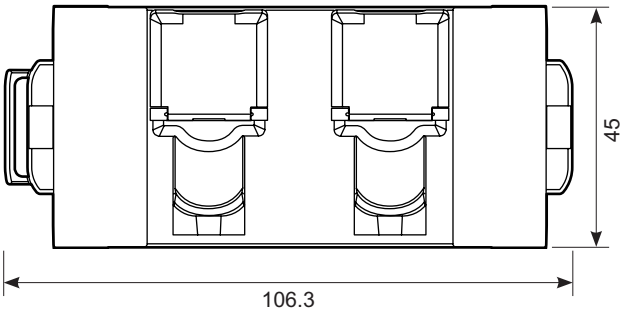

Side view:

765 22/23/44/46/61/62/64/65/81/82
794 61/62/64/65

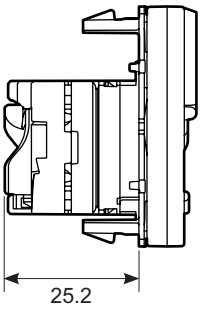

765 91/92
794 92

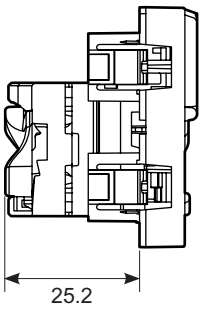

765 63/66/83/93/94/95

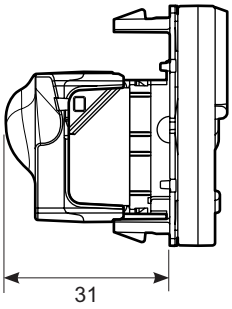

7. USUAL CONNECTION OF RJ 45S

Accepts the following cable connectors:
RJ11 (4 contacts), RJ12 (6 contacts), RJ45 (9 contacts).

Double colour code EIA - TIA 568 A and B on terminals:
- UTP 8 contacts
- FTP 9 contacts
- STP 9 contacts 360° screen

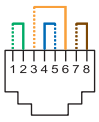

EIA 568 A

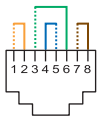

EIA 568 B

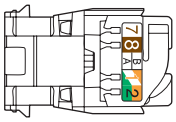

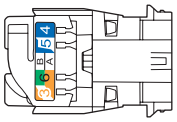

Conductors supported:
- Single-wire: 0.5 to 0.65 mm, AWG 22 to 25
- Multiple-wire: AWG 26
- Polyethylene conductor insulation: max Ø with insulation 1.58 mm

7. USUAL CONNECTION OF RJ 45S *(cont.))*

RJ 45 connectors are equipped with a locking nut that does not require the use of a specific tool and which enables re-cabling in the event of error.

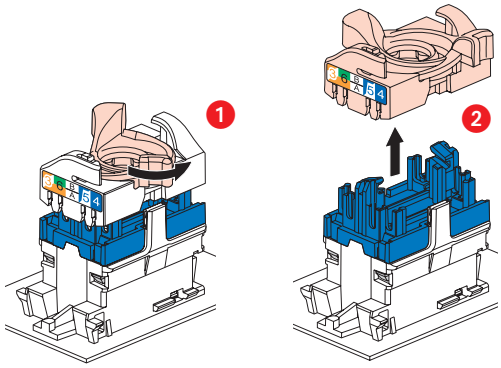

This system allows the wire pairs to be spread easily before mounting them on the connector.

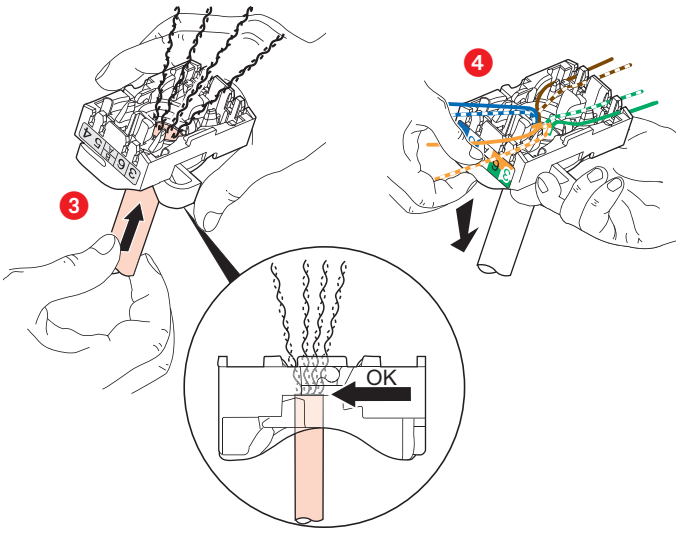

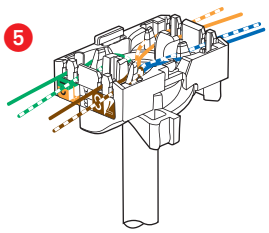

Spreading cables ensures that each pair is separated by the specified 13 mm.
Spreading pairs by 90° in relation to the cable ensures optimum performance.

8. STANDARDS AND APPROVALS

Compliant with standards: ISO/IEC 11801 Edition 2
CENELEC EN 50173-1 2007
ANSI/EIA/TIA 568-B.2-1
IEC series 60603-7