Product Data Sheet

GW44205

Seria 44 CE

Produkty z serii 44 CE stanowią wodoszczelne puszki instalacyjne do montażu natynkowego zgodne z normami EN 60670-1 (CEI 23-48) oraz IEC 60670-22 (CEI 23-94) oraz wykonane z technopolimerów o wysokiej wytrzymałości.. W tej serii produktów znajdują się wersje o stopniu ochrony IP44, IP55, IP56 z gładkimi ściankami lub wyposażone w dławiki kablowe do szybkiego montażu oraz różne rodzaje pokryw: zaślepiające / przezroczyste, wklęsłe / płaskie, wciskane / wkręcane (wykonane z tworzywa sztucznego, również wkręcane na 1/4 obrotu, lub wykonane z metalu).. Produkty dostępne są w wykonaniu z wielu rodzajów materiałów samogasnących (do 960 °C w próbie rozżarzonym drutem). Nadają się do przyłączy zwykłych, do zastosowań specjalnych, a także do zastosowań przemysłowych..

Klasa Izolacji	II (zgodnie z normami IEC 61140)	Kolor	Szary RAL 7035
Ochrona IP	IP56	Materiał	Technopolimerowy GWPLAST 75
Odporność na wstrząsy	IK08	Wymiary wewnętrzne LxHxD (mm)	120x80x50
Maks. Ø otworów, możliwa	29 mm	Śruby pokrywy (liczba i typ)	4 - stal nierdzewna
Zastosowanie	Zwykłe przyłącza	Próba rozżarzonym drutem	650 °C
Pokrywka	Płaska wkręcana	Temperatura robocza	-25 +60 °C
Rodzaj materiału	Bezhalogenowe zgodnie z normą EN 50267-2-2	Electrocod	02211
Twardość kulkowa	85 °C	Moment dokręcania moment dokręcania śrub	1 NM
Ściany	Gładki	Wyposażenie dodatkowe do przywrócenia izolacji	GW44622

DIMENSIONAL

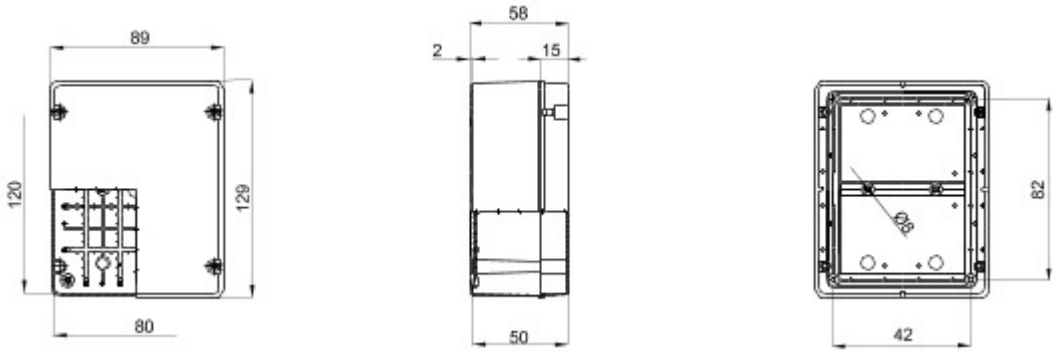

TECHNICAL SYMBOLOGY

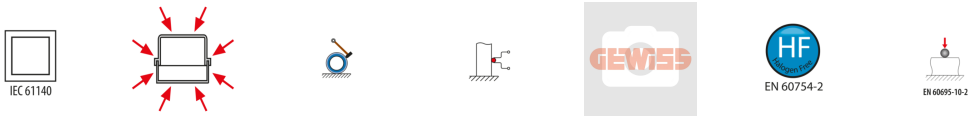

II (zgodnie z normami IEC 61140) | IP56 | IK08 | 650 °C | -25 +60 °C | Bezhalogenowe zgodnie z normą EN 50267-2-2 | 85 °C

STANDARDS/APPROVALS

GEWISS S.p.A. Via A. Volta, 1
24069 Cenate Sotto - Bergamo - Italy
tel. +39 035 94 61 11 fax +39 035 94 69 09

www.gewiss.com
sat@gewiss.com
Last update 12/07/2018

Data, measures, designs and pictures are shown only as informativ purposes, and could be changed without previous notice

44 CE RANGE - SURFACE-MOUNTING JUNCTION BOXES

Material		Technopolymer GW PLAST 75							
Heat resistance		Thermo-pressure with ball: 85°C							
Fire resistance		Glow Wire Test: 650°C - UL94: HB							
Applications		For ordinary junctions							
Degree of protection		IP44	IP55			IP56			
Walls		with quick entry cable glands	with quick entry cable glands		smooth	smooth			
Depth of back-mounting box		standard	standard		standard	standard		high capacity	
Cover		blank plain	1/4 turn screws blank plain	blank plain	1/4 turn screws blank plain	blank plain	deep blank	blank plain	transparent plain
INTERNAL DIMENSIONS OF BOX BASE LxH (mm)	Dimensions (mm)								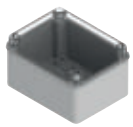
	Ø 65	GW 44 001							
	Ø 80	GW 44 002							
	80x80	GW 44 003							
	100x100		GW 44 024	GW 44 004	GW 44 234	GW 44 204	GW 44 214	GW 44 114	
	120x80			GW 44 005		GW 44 205	GW 44 215		
	150x110		GW 44 026	GW 44 006	GW 44 236	GW 44 206	GW 44 216		
	190x140			GW 44 007		GW 44 207	GW 44 217	GW 44 117	GW 44 137
	240x190			GW 44 008		GW 44 208	GW 44 218	GW 44 118	GW 44 138
	300x220			GW 44 009		GW 44 209	GW 44 219	GW 44 119	GW 44 139
	380x300			GW 44 010		GW 44 210	GW 44 220	GW 44 120	GW 44 140
	460x380			GW 44 011		GW 44 211	GW 44 221		

version with Halogen-free material.
(*) versions with red back-mounting box and grey lid
(**) versions CSA approved (in accordance to the UL50 Standard)
In green: insulation voltage Ui=1000V according to EN 60670-1 and EN 60670-22. For photovoltaic applications use the wall fixing brackets , code GW 44 621.
In red: insulation voltage Ui=750V according to EN 60670-1 and EN 60670-22. For photovoltaic applications use the wall fixing brackets , code GW 44 621.

SMOOTH WALLS - IP55 AND IP56

GW 44 234

JUNCTION BOXES WITH PLAIN QUICK FIXING LID - IP55 - GREY RAL 7035

HF EN 60754-2

Code	Internal dim. LxHxD (mm)	Max Ø holes possible	Lid screws (no. and type)	Pack Carton
GW 44 234	100x100x50	29 mm	4 insul. a 1/4 turn, sealable	105
GW 44 236	150x110x70	29 mm	4 insul. a 1/4 turn, sealable	50

NOTES: to restore the double insulation and original IP degree of protection of the boxes, use the isolating screwcaps.

GW 44 207

JUNCTION BOXES WITH PLAIN SCREWED LID - IP56 - GREY RAL 7035

HF EN 60754-2

Code	Internal dim. LxHxD (mm)	Max Ø holes possible	Lid screws (no. and type)	Pack Carton
GW 44 204	100x100x50	29 mm	4 - Stainless steel	105
GW 44 205	120x80x50	29 mm	4 - Stainless steel	91
GW 44 206	150x110x70	29 mm	4 - Stainless steel	50
GW 44 207	190x140x70	37 mm	4 insul. sealable hinged	30
GW 44 208	240x190x90	37 mm	4 insul. sealable hinged	14
GW 44 209	300x220x120	48 mm	4 insul. sealable hinged	6
GW 44 210	380x300x120	48 mm	4 insul. sealable hinged	4
GW 44 211	460x380x120	48 mm	6 insul. sealable hinged	3

ACCESSORIES SUPPLIED: GW44211 screwcaps for double insulation.

NOTES: to restore the double insulation and original IP degree of protection of the boxes, use the isolating screwcaps or the surface-mounting fixing brackets for boxes measuring at least 190x140mm.

GW 44 217

JUNCTION BOXES WITH DEEP SCREWED LID - IP56 - GREY RAL 7035

HF EN 60754-2

Code	Internal dim. LxHxD (mm)	Max Ø holes possible	Lid screws (no. and type)	Pack Carton
GW 44 214	100x100x120	29 mm	4 - Stainless steel	45
GW 44 215	120x80x120	29 mm	4 - Stainless steel	55
GW 44 216	150x110x140	29 mm	4 - Stainless steel	24
GW 44 217	190x140x140	37 mm	4 insul. sealable hinged	16
GW 44 218	240x190x160	37 mm	4 insul. sealable hinged	12
GW 44 219	300x220x180	48 mm	4 insul. sealable hinged	7
GW 44 220	380x300x180	48 mm	4 insul. sealable hinged	3
GW 44 221	460x380x180	48 mm	6 insul. sealable hinged	2

ACCESSORIES SUPPLIED: GW44221 screwcaps for double insulation.

NOTES: to restore the double insulation and original IP degree of protection of the boxes, use the isolating screwcaps or the surface-mounting fixing brackets for boxes measuring at least 190x140mm.

44 CE RANGE - JUNCTION BOXES WITH CABLE GLANDS

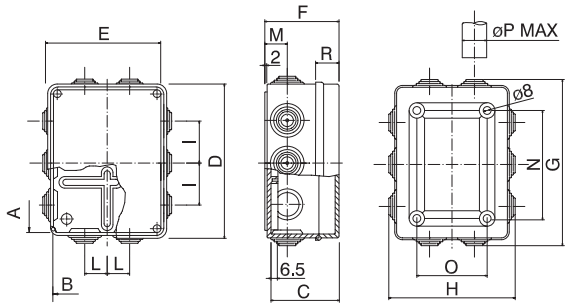

Code	A	B	C	D	E	F	G	H	I	L	M	N	O	P	R
GW 44 007 GW 44 057	190	140	70	200	154	79	216.5	170.5	52	26	29	144	98	32	25

44 CE RANGE - JUNCTION BOXES WITH CABLE GLANDS

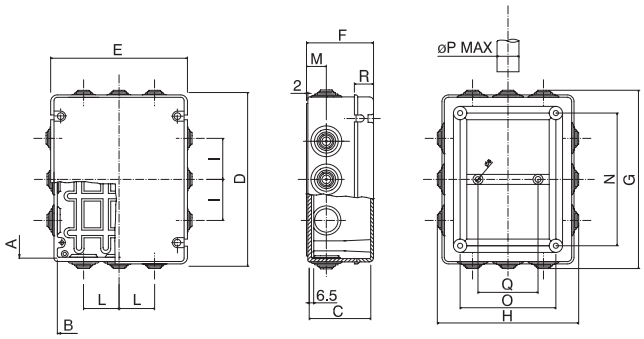

Code	A	B	C	D	E	F	G	H	I	L	M	N	O	P	Q	R
GW 44 008 GW 44 058	240	190	90	254	200	98	270.5	215.5	60	52	29	194	140	32	-	28
GW 44 009 GW 44 059	300	220	120	316	236	128	334.5	254.5	62	60	37.5	250	170	40	-	49.5
GW 44 010 GW 44 060	380	300	120	396	316	128	414.5	334.5	71	62	37.5	331	251	40	124	49.5
GW 44 011 GW 44 061	460	380	120	474	396	128	442.5	414.5	65	71	37.5	380	310	40	300	49.5

44 CE RANGE - JUNCTION BOXES WITH SMOOTH WALLS - PLAIN LID

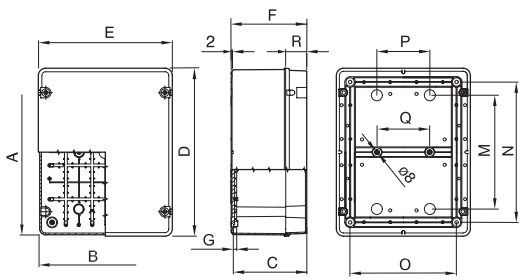

Code	A	B	C	D	E	F	N	O	R
GW 44 204 GW 44 234 GW 44 274 GW 44 404	100	100	50	109	109	58	64	64	15
GW 44 205 GW 44 275 GW 44 405	120	80	50	129	89	58	82	42	15
GW 44 206 GW 44 236 GW 44 276C GW 44 276 GW 44 406 GW 44 426	150	110	70	159	119	76	112	72	24

44 CE RANGE - JUNCTION BOXES WITH SMOOTH WALLS - DEEP LID

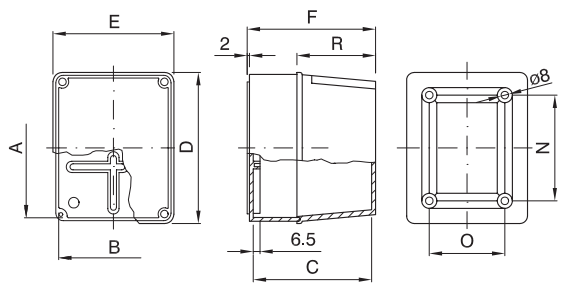

Code	A	B	C	D	E	F	N	O	R
GW 44 214 GW 44 414 GW 44 254	100	100	120	109	109	126	64	64	83
GW 44 215 GW 44 415 GW 44 255	120	80	120	129	89	126	82	42	83
GW 44 216 GW 44 416 GW 44 436 GW 44 256	150	110	140	159	119	146	112	72	94

Quick Reference

Code	Quantity		Page
	Pack/carton	Pallet	
GW 40 886	6	90	1368
GW 40 886 BD	6	0	1368
GW 40 886 BS	6	0	1368
GW 40 888	4	80	1368
GW 40 888 BS	4	0	1368
GW 40 889	3	45	1368
GW 40 889 BD	3	0	1368
GW 40 889 BS	3	0	1368
GW 40 890	2	48	1368
GW 40 890 BD	2	0	1368
GW 40 890 BT	2	0	1368
GW 40 891	1	24	1368
GW 40 891 BD	1	0	1368
GW 40 891 BQ	1	0	1368
GW 40 981 TB	1/2	80	1365
GW 40 981 VA	1/2	80	1365
GW 40 981 VT	1/2	80	1365
GW 40 991 TB	1/2	64	1365
GW 40 991 VA	1/2	64	1365
GW 40 991 VT	1/2	64	1365
GW41			
GW 41 225 TB	16	128	1363
GW 41 225 TN	16	128	1363
GW 41 225 VA	16	128	1363
GW 41 225 VT	16	128	1363
GW 41 229 TB	12	192	1363
GW 41 229 TN	12	192	1363
GW 41 229 VA	12	96	1363
GW 41 229 VT	12	96	1363
GW 41 233 TB	5	150	1363
GW 41 233 TN	5	80	1363
GW 41 233 VA	5	40	1363
GW 41 233 VT	5	40	1363
GW 41 237 TB	12	240	1363
GW 41 237 TN	12	240	1363
GW 41 237 VA	12	240	1363
GW 41 237 VT	12	240	1363
GW 41 239 TB	5	60	1363
GW 41 239 TN	5	60	1363
GW 41 239 VA	5	60	1363
GW 41 239 VT	5	60	1363
GW42			
GW 42 001	32	1024	1325
GW 42 002	44	704	1325
GW 42 003	32	512	1325
GW 42 004	16	512	1325
GW 42 005	21	336	1325
GW 42 006	16	256	1325
GW 42 007	10	160	1325
GW 42 008	10	250	1325
GW 42 009	8	128	1325
GW 42 010	5	80	1325
GW 42 201	1/10	900	1292
GW 42 202	1/10	200	1293
GW 42 203	1/10	200	1293
GW 42 204	1/10	400	1292
GW 42 206	1/10	400	1293
GW 42 207	1/10	160	1293
GW 42 208	1/10	200	1293
GW 42 211	1/10	1440	1295
GW 42 212	1/10	1280	1295
GW 42 213	1/10	3120	1295
GW 42 214	1/10	1440	1295

Code	Quantity		Page
	Pack/carton	Pallet	
GW 42 216	1/10	1600	413
GW 42 216	1/10	1600	1295
GW 42 231	1/10	240	1293
GW 42 232	1/10	200	1293
GW43			
GW 43 021 S	1	120	1274
GW 43 022 S	1	91	1274
GW 43 023 S	1	48	1274
GW 43 024 S	1	33	1274
GW 43 040 S	100	31200	1279
GW 43 041 S	1	0	1277
GW 43 042 S	2/20	6240	1278
GW 43 044 S	10/100	3600	1279
GW 43 045 S	10	0	1277
GW 43 047 S	1	100	1276
GW 43 048 S	1	100	1276
GW 43 049 S	1	100	1276
GW 43 052 S	1/10	1280	1279
GW 43 055 S	1	20	1275
GW 43 056 S	1	16	1275
GW 43 057 S	1/5	10	1275
GW 43 058 S	1	33	1275
GW 43 071 S	1/4	364	1275
GW 43 072 S	1/4	224	1275
GW 43 073 S	1/2	200	1275
GW 43 074 S	1/2	160	1275
GW 43 081 S	1	16	1275
GW 43 082 S	1	16	1275
GW 43 083 S	1	20	1275
GW 43 085 S	1	20	1275
GW 43 101 S	1	80	1276
GW 43 102 S	1	80	1276
GW 43 103 S	1	80	1276
GW 43 104 S	1	80	1276
GW 43 111 S	1	0	1276
GW 43 112 S	1	32	1276
GW 43 113 S	1	20	1276
GW 43 114 S	1	6	1276
GW 43 122 S	10/100	0	1278
GW44			
GW 44 001	5/280	8400	1303
GW 44 002	5/135	4725	1303
GW 44 003	5/90	4050	1303
GW 44 004	66	1980	1304
GW 44 005	66	1980	1304
GW 44 006	40	1000	1304
GW 44 007	24	600	1304
GW 44 008	12	300	1304
GW 44 009	6	150	1304
GW 44 010	4	100	1304
GW 44 011	3	60	1304
GW 44 024	66	1980	1303
GW 44 026	40	1000	1303
GW 44 051	5/280	5600	1307
GW 44 051 R	5/280	5600	1307
GW 44 052	5/135	2700	1307
GW 44 053	5/90	2520	1307
GW 44 053 R	5/90	2520	1307
GW 44 054	66	1980	1307
GW 44 054 R	66	1320	1308
GW 44 055	66	660	1308
GW 44 056	40	800	1307
GW 44 056 R	40	640	1308

Code	Quantity		Page
	Pack/carton	Pallet	
GW 44 057	24	384	1308
GW 44 058	12	192	1308
GW 44 059	6	96	1308
GW 44 060	4	64	1308
GW 44 061	3	36	1308
GW 44 114	1/45	900	1306
GW 44 117	1/16	256	1306
GW 44 118	1/12	192	1306
GW 44 119	1/7	84	1306
GW 44 120	1/3	60	1306
GW 44 137	1/16	128	1306
GW 44 138	1/12	192	1306
GW 44 139	1/7	84	1306
GW 44 140	1/3	60	1306
GW 44 204	105	2625	1305
GW 44 205	91	2730	1305
GW 44 206	50	1250	1305
GW 44 207	30	750	1305
GW 44 208	14	350	1305
GW 44 209	6	180	1305
GW 44 210	4	100	1305
GW 44 211	3	75	1305
GW 44 214	45	900	1305
GW 44 215	55	880	1305
GW 44 216	24	600	1305
GW 44 217	16	384	1305
GW 44 218	12	240	1305
GW 44 219	7	140	1305
GW 44 220	3	75	1305
GW 44 221	2	50	1305
GW 44 234	105	2625	1305
GW 44 236	50	1250	1305
GW 44 254	45	360	1309
GW 44 255	55	220	1309
GW 44 256	24	96	1309
GW 44 257	16	240	1309
GW 44 258	12	144	1309
GW 44 259	7	84	1309
GW 44 260	3	48	1309
GW 44 261	2	32	1309
GW 44 274	105	420	1309
GW 44 275	91	1820	1309
GW 44 276	50	800	1309
GW 44 276 C	50	800	1309
GW 44 277	30	480	1309
GW 44 277 C	30	480	1309
GW 44 278	14	224	1309
GW 44 279	6	120	1309
GW 44 280	4	64	1309
GW 44 281	3	48	1309
GW 44 404	108	1728	1310
GW 44 405	108	1728	1310
GW 44 406	50	800	1310
GW 44 407	32	512	1310
GW 44 408	14	224	1310
GW 44 409	6	120	1310
GW 44 410	4	64	1310
GW 44 411	3	48	1310
GW 44 414	45	360	1310
GW 44 415	55	220	1310
GW 44 416	24	384	1310
GW 44 417	16	240	1310
GW 44 418	12	144	1310
GW 44 419	7	84	1310

① September 2017 ② October 2017 ③ December 2017